شناسنامه فنی

متریال کد :

Material code: **3803050012**

شماره دفترچه :

Document No. **BF50233**

تهیه کننده : شرکت آفتاب طراحان یزد

Perform by: Aftab Tarahan Yazd . Co

کار فرما : شرکت فولاد آلیاژی ایران

Client: IRAN ALLOY STEEL .Co

DANIELI
2

2

IRAN ALLOY STEEL CO.			شرکت فولاد آلیاژی ایران	
Date	1405/02/05	دفترچه مشخصات فنی Technical Specification Document	Document No	BF50233
IASCo Code	3803050012		Material	-
Description	LADLE ASSEMBLY		POS	-

1– بازرسی

	DESCRIPTION OF TEST		STD TEST	INSPECTION TYPE	REQUIRED TEST	SPECIFICATION		
1	*Analyze of material*		*Report of a valid laboratory/company*	*R*	✓	-		
2	*Visual and dimensional check*		*Dwg & Specif.*	*R*	✓	*Check by **Tool***		
3	*Fit up*	*Assembly*	-	*W*	✓	-		
		Beveling & Gap check & Hi-lo	*DANIELI 2.8.114* *DANIELI 2.8.115*					
4	*NDT on welding*		*DANIELI 2.8.114* *DANIELI 2.8.115*	*H*	✓	*SEE DWG*		
5	*NDT on casting*		*DANIELI 2.8.004* *DANIELI 2.8.005* *DANIELI 2.8.017*	*H*		*VT / DT %*	*PT %*	*UT %*
						-	-	-
						Case of Casting		-
6	*NDT on forging & rolled bars*		*DANIELI 2.8.001* *DANIELI 2.8.009*	*R*	✓	*VT / DT %*	*PT %*	*UT %*
						-	-	*100 %*
						Forging or Rolled bar class		-
7	*Tensile test*		*ISO 6892*	*R*	✓	***for St52***		
8	*Impact test*		*ISO 148*	*R*		-		
9	*Metallographic structure*		*DANIELI 2.8.004* *DANIELI 2.8.017*	*R*		-		
10	*Elastomer properties*		*ASTM D 2240* *ASTM D 395*	*R*		*Hardness:*	-	
						% Compression set:	-	
11	*Heat treatment cycle*		*DANIELI 2.8.300* *DANIELI 2.8.101*	*R*		*Cycle*	-	-
						Hardness	-	-
						Depth	-	-
12	*Coating*		*Report of a valid laboratory or company*	*R*		*Type*	-	
						Hardness	-	
						Thick	-	
13	*Balancing*		*ISO1940-1*	*R*		*Speed:*	-	*Quality grade:* -
14	*Pressure test / leak test*		*DANIELI 2.8.102*	*W*		-		
15	*Surface Protection inspection, painting*		*DANIELI 2.8.302*	*R*	✓	*Cycle:*	*K*	***RAL: Inorganic zinc color***
16	*Marking & Packing*		*DANIELI 2.8.002*	*W*	✓	***Marking with Numberplate***		
						-		

R(REVIEW) : بررسی مدارک QC سازنده H(HOLD) : ادامه تولید با اجازه بازرسِ کارفرما W(WITNESS): الزام هماهنگی با بازرسِ کارفرما جهت اجرای فرآیند

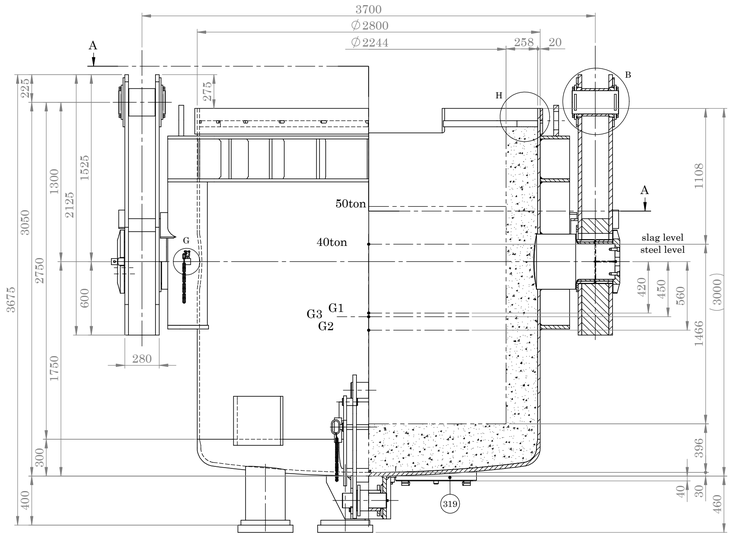

SECTION B-B
SCALE 1 : 25

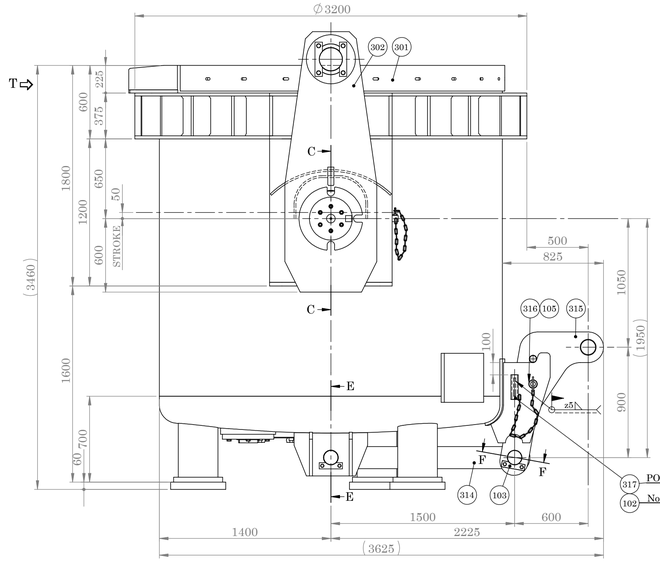

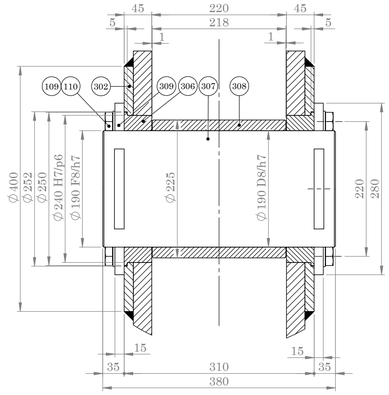

DETAIL B
SCALE 1 : 5

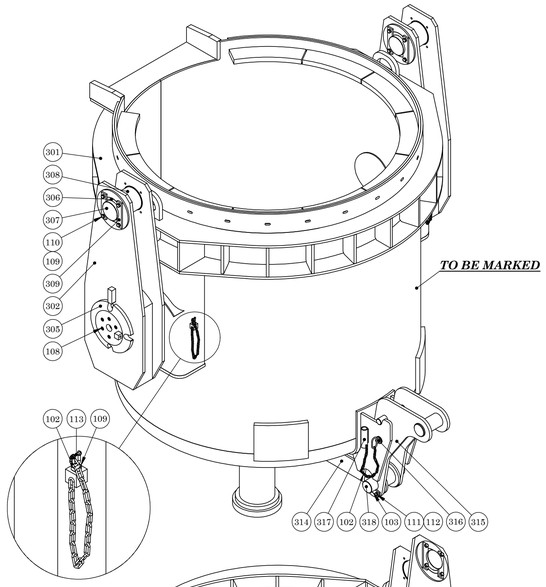

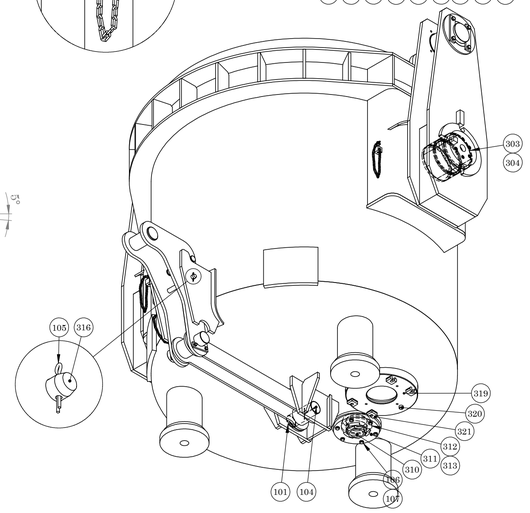

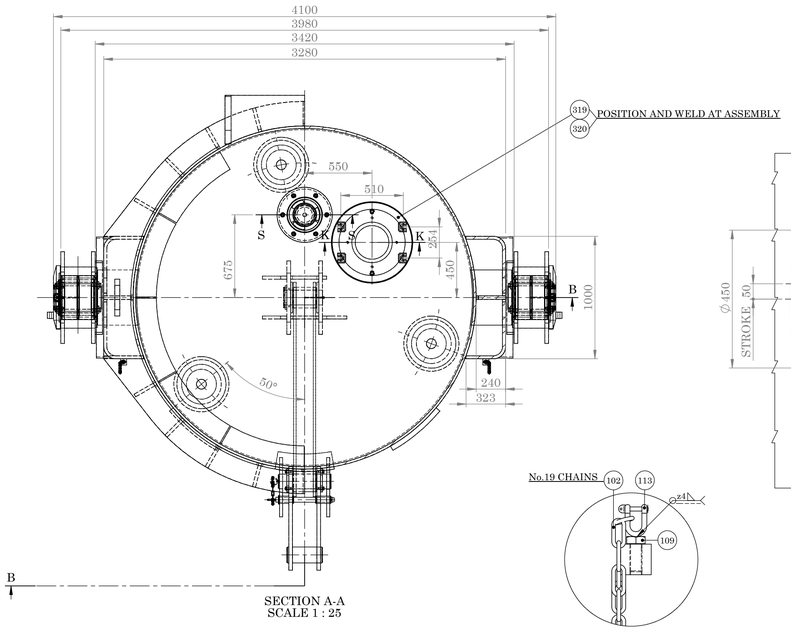

SECTION A-A
SCALE 1 : 25

DETAIL G
SCALE 1 : 5

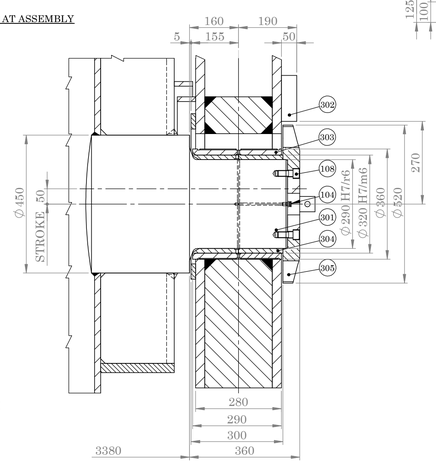

SECTION C-C
SCALE 1 : 10

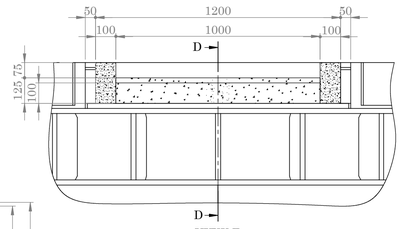

VIEW T
SCALE 1 : 15

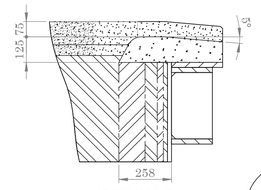

SECTION D-D
SCALE 1 : 15

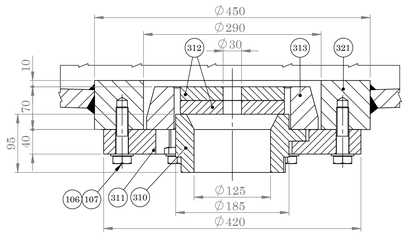

SECTION S-S
SCALE 1 : 5

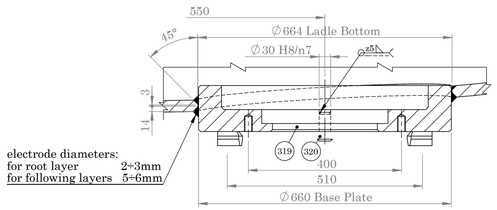

electrode diameters:
for root layer 2÷3mm
for following layers 5÷6mm

SECTION K-K
SCALE 1 : 8

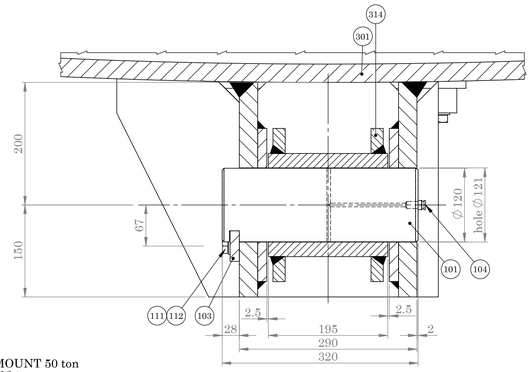

SECTION E-E
SCALE 1 : 5

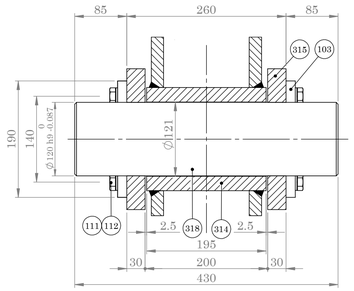

SECTION F-F
SCALE 1 : 5

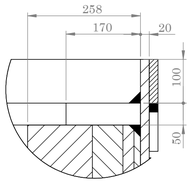

DETAIL H
SCALE 1 : 7

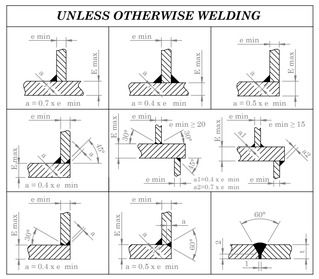

NOTE :

MAX HOT METAL AMOUNT 50 ton
THE BODY WEIGHT 13 ton
REFRACTORY WEIGHT 20 ton
WEIGHT OF EMPTY LADLE 33ton
WEIGHT OF 40 ton LADLE 73 ton

G1 CENTER OF GRAVITY EMPTY LADLE
G2 CENTER OF GRAVITY 40t LADLE
G3 CENTER OF GRAVITY 50t LADLE

POS	QTY	DESCRIPTION	MATERIAL	MASS (kg) UNIT	MASS (kg) TOTAL	QCTM No.	CODE No.	ASSY . CODE
113	01	SHACKLES DIN 82101 FORM A	-	0.09	0.09	STD	0.070141.K	3803050012
112	06	SPRING WASHER DIN 127-B16	-	0.01	0.6	STD	0.001297.F	3803050012
111	06	HEX SCREW DIN933-M16x35 - 8.8	-	0.08	0.48	STD	0.000290.X	3803050012
110	16	SPRING WASHER DIN 127-B20	-	0.01	0.16	STD	0.001298.P	3803050012
109	17	HEX SCREW DIN 933-M20x45 - 8.8	-	0.17	2.72	STD	0.000300.A	3803050012
108	12	SOCK SCREW DIN 912-M20x50 - 8.8	-	0.17	1.36	STD	0.000460.S	3803050012
107	06	WASHER DIN 125-21x37x3,A2-70 140HV	-	0.01	0.06	STD	0.068277.V	3803050012
106	06	HEX BOLT DIN 931 M20x80-A2/70	-	0.26	1.56	STD	0.091567.Z	3803050012
105	01	COTTER PIN 10x71 DIN 94	-	-	-	STD	0.001524.T	3803050012
104	03	GREASE NIPPLE TYPE B ISO 228/1	ZINC COATED C	-	-	STD	0.002792.G	3803050012
103	02	PLATE FOR FITTING PIN-190x50x15	ST44-2	1	2	STD	0.005085.T	3803050012
102	59	CHAIN G6x42(Z :21,Z :2x19)DIN 5685	GALVANIZED	-	-	STD	0.070133.C	3803050012
101	01	PLAIN PIN WITH GREASE HOLE	C40	28.42	28.42	STD	0.008470.X	3803050012
321	01	POROUS PLUG	ST44-2	58	58	BF50230.13	3009020019	3803050012
320	02	PIN FOR BASE PLATE	CK45	056	1.12	BF50233.4	3023010192	3803050012
319	01	BASE PLATE	H II	180	180	BF50233.3	3040140018	3803050012
318	01	PIN	CK45	38	38	BF50230.11	4.280420.E	3803050012
317	01	SUPPORT	ST44-2/ST55	2.3	2.3	BF50230.10	4.280099.C	3803050012
316	01	PIN	UST37-2	5	5	BF50230.9	4.280419.G	3803050012
315	01	LEVER	SEE DWG	218	218	BI30116	4.280418.F	3803050012
314	01	LEVER	SEE DWG	130	130	BA20182	4.280417.X	3803050012
313	01	SPACER	ST44-2	16	16	BF50230.8	4.245868.K	3803050012
312	02	WASHER	ST44-2	4	8	BF50230.7	4.245867.B	3803050012
311	01	FLANGE	ST 44-2	34	34	BI30087	4.200579.S	3803050012
310	01	SUPPORT	P265GH	10	10	BA20132	4.200578.Z	3803050012
309	04	BASE PLATE	ST44-2	1.7	6.8	BF50230.6	4.200351.R	3803050012
308	02	BUSH	ST52.0	19	38	BF50230.5	4.262873.A	3803050012
307	02	PIN	CK45	84	168	BF50230.4	4.262872.G	3803050012
306	04	BUSH	CK45	6	24	BF50230.3	4.262871.F	3803050012
305	02	FLANGE	ST44-2	67.5	135	BF50233.2	3040110067	3803050012
304	02	BUSH	CK45	33	66	BF50230.2	4.262869.M	3803050012
303	02	CONTOURED BUSHING	G Cu Sn 12	52	104	BT10842	4.262868.L	3803050012
302	02	LEVER	P265GH	1150	2300	BI30117	4.333173.R	3803050012
301	01	LADLE BODY	SEE DWG	10000	10000	BF50233.1	3803050021	3803050012
200	01	ASSEMBLY	-	13000	13000	BF50233	3803050012	-

NOTE:
Dimension without tolerance follow:
ISO 2768-M

	NAME	DATE
DES.		
DRA.	M.H.Farahat	92/02/30
CHK.	A.Alamdar	92/03/01
APPR.	M.Mirjalili	92/03/03

TITLE:
PLANT UNIT 03
IASCO LADLE
40 ton VOD

IRAN ALLOY STEEL CO

ORDER.	RF6/7	REF.DRAW	***SD1203M2901001***	REV
CODE No.	3803050012	DWG No.	***FD1203M2901001***	00
QCTM No.	BF50233	SCALE: 1 : 25	SIZE: A1	SHEET: 1 OF 1

IRAN ALLOY STEEL CO.			شرکت فولاد آلیاژی ایران	
Date	1405/02/05	دفترچه مشخصات فنی Technical Specification Document	Document No	BF50233.1
IASCo Code	3803050021		Material	-
Description	LADLE BODY		POS	301

1 – بازرسی

	DESCRIPTION OF TEST		STD TEST	INSPECTION TYPE	REQUIRED TEST	SPECIFICATION		
1	*Analyze of material*		*Report of a valid laboratory/company*	*R*	✓	-		
2	*Visual and dimensional check*		*Dwg & Specif.*	*R*	✓	*Check by **Tool***		
3	*Fit up*	*Assembly*	-	*W*	✓	-		
		Beveling & Gap check & Hi-lo	*DANIELI 2.8.114* *DANIELI 2.8.115*					
4	*NDT on welding*		*DANIELI 2.8.114* *DANIELI 2.8.115*	*H*	✓	*VT / DT %*	PT&UT or MT %	***RT %***
						%100	*%100*	%100 Joint of POS 20 &12 - POS 20 connected to POS 12
						Acceptance criteria according to AWS D14.4/D14.4M		***II***
5	*NDT on casting*		*DANIELI 2.8.004* *DANIELI 2.8.005* *DANIELI 2.8.017*	*H*		*VT / DT %*	*PT %*	*UT %*
						-	-	-
						Case of Casting		-
6	*NDT on forging & rolled bars*		*DANIELI 2.8.001* *DANIELI 2.8.009*	*R*	✓	*VT / DT %*	*PT %*	*UT %*
						-	-	*%100*
						Forging or Rolled bar class		***C***
7	*Tensile test*		*ISO 6892*	*R*	✓	***for St52***		
10	*Elastomer properties*		*ASTM D 2240* *ASTM D 395*	*R*		*Hardness:*	-	
						% Compression set:	-	
11	*Heat treatment cycle*		*DANIELI 2.8.300* *DANIELI 2.8.101*	*R*	✓	*Cycle*	*Stress relieving*	-
						Hardness	-	-
						Depth	-	-
12	*Coating*		*Report of a valid laboratory or company*	*R*		*Type*	-	
						Hardness	-	
						Thick	-	
13	*Balancing*		*ISO1940-1*	*R*		*Speed:*	-	*Quality grade:* -
14	*Pressure test / leak test*		*DANIELI 2.8.102*	*W*		-		
15	*Surface Protection inspection, painting*		*DANIELI 2.8.302*	*R*	✓	*Cycle:*	*K*	***RAL: Inorganic zinc color***
16	*Marking & Packing*		*DANIELI 2.8.002*	*W*	✓	*Marking with* Number plate		
						-		

R(REVIEW) : بررسی مدارک QC سازنده H(HOLD) : ادامه تولید با اجازه بازرسِ کارفرما W(WITNESS): الزام هماهنگی با بازرسِ کارفرما جهت اجرای فرآیند

REVISIONS			
REV.	DESCRIPTION	DATE	APPROVED
01	Delete POS 01 & 02 & Edit POS 20	1405/02/02	Sa.Oliaei

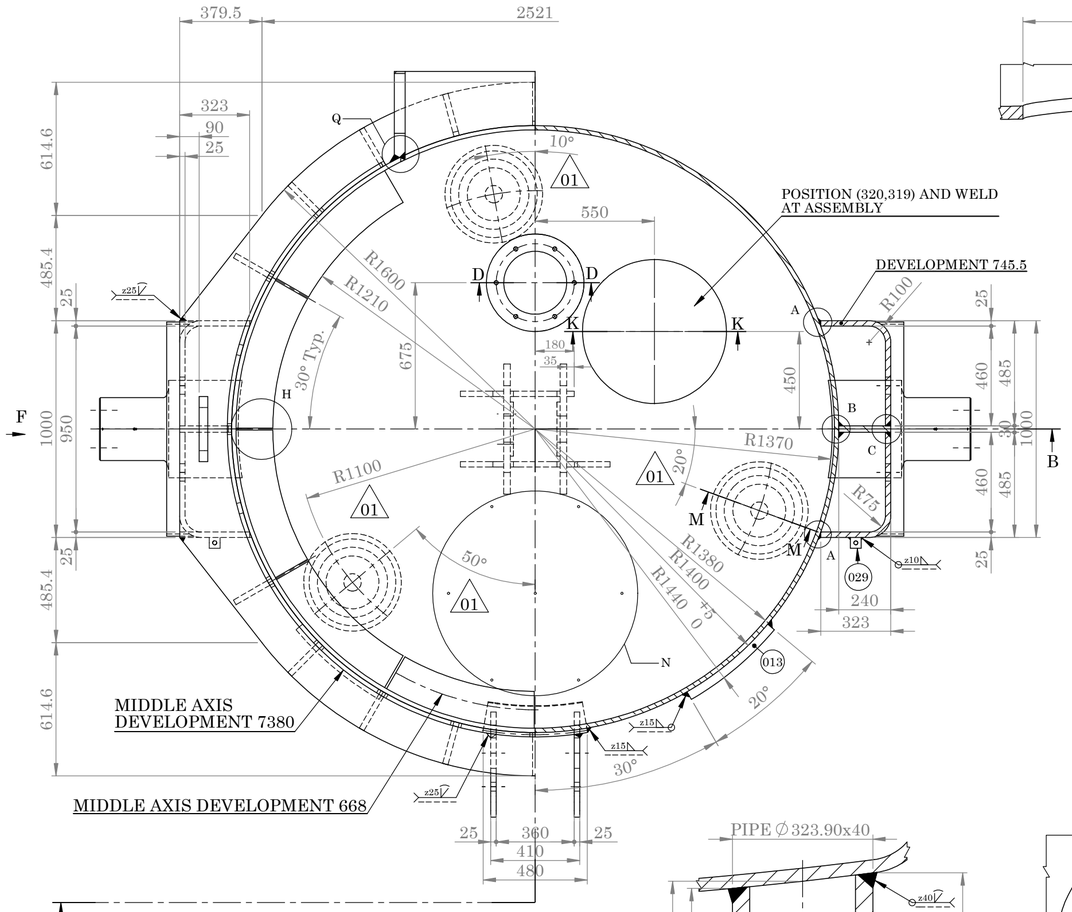

SECTION A-A
SCALE 1 : 20

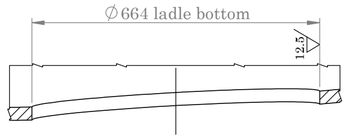

SECTION K-K
SCALE 1 : 10

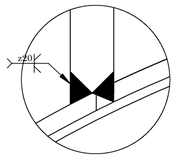

DETAIL Q
SCALE 1 : 5

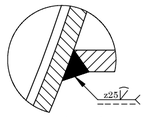

DETAIL A
SCALE 1 : 5

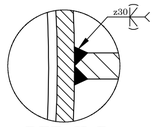

DETAIL B
SCALE 1 : 5

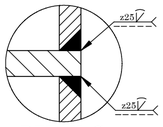

DETAIL C
SCALE 1 : 5

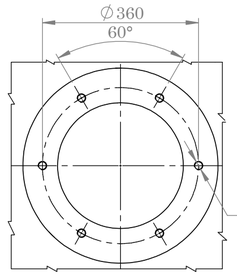

VIEW E
SCALE 1 : 10

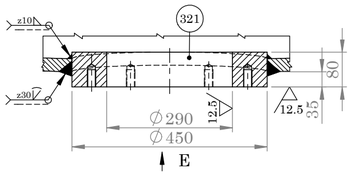

SECTION D-D
SCALE 1 : 10

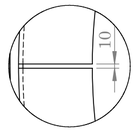

DETAIL H
SCALE 1 : 10

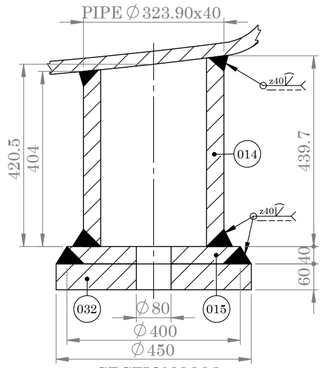

SECTION M-M
SCALE 1 : 10

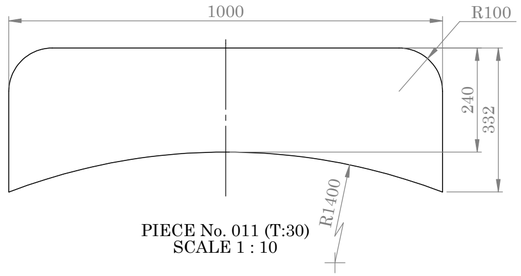

PIECE No. 011 (T:30)
SCALE 1 : 10

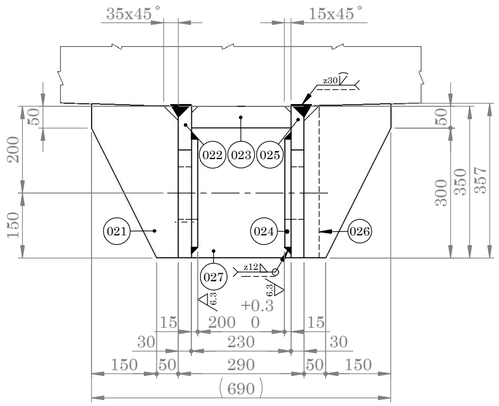

VIEW G
SCALE 1 : 10

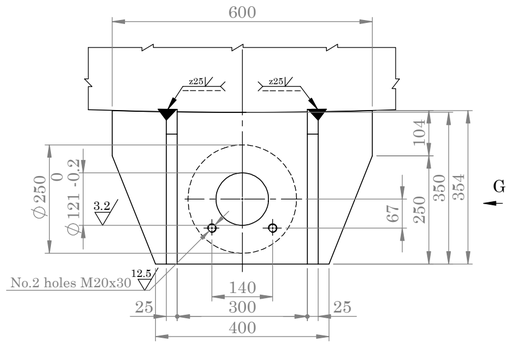

VIEW F
SCALE 1 : 10

WELDING INSTRUCTIONS:

1-Heat the ladle bottom and the base to 150÷200 C° (302÷392 °F) important:this temperature must be maintained during the whole welding process.
2-Weld the root layer on one side,grind the other side of the root layer clean.
3-Apply root layer on other side.
4-Apply following layers alternating inside and outside.
5-It is recommended for a wall thickness of over 60mm to use for the first 2÷3 layers the following.

ELECTRODES: DIN 1913 E 4343 B10
ISO 2560 E 434 B20 (H)

NOTES:

-THE STEEL SHEETS OF THE ACTUAL BODY ARE TO BE 100% CHECKED WITH ULTRASONIC WAVES PREVIOUS TO THE ASSEMBLY AND MUST FALL IN CANDOR 2 OF THE UN 5329-63 STANDARDS.

-ALL WELDINGS MUST BE 100% CHECKED THROUGH WITH RADIOGRAPHIC INSPECTION (X-RAYS) AND ULTRASONIC WAVES CONTROL.

-THE ACCEPTABLE DEGREE OF THE WELDINGS MUST COMPLY WITH THE T GROUPINGS OF THE UN 7278-74 STANDARDS EVEN IF THIS STD CONCERNS ONLY THE DEGREES OF FAULTS IN THE HEAD TO HEAD WELDINGS IN REFERENCE TO THE X-RAYS CONTROL.

-THE WELDING PROCEDURE MUST BE QUALIFICATE ACCORDING TO THE STEEL OF THE LADLE BODY AND IT'S WORKING TEMPERATURE(400°C).

-ALL WELDINGS MUST HAVE THE SAME CHARACTERISTICS OF THE BASIC MATERIAL.

-THE WELDINGS PROCEDURE CERTIFICATES AND WELDER'S QUALIFICATION MUST BE ENCLOSED.

-THE CASTING CERTIFICATE (CHEMICAL ANALYSIS) MUST BE ENCLOSED.

-THE MECHANICAL TESTING CERTIFICATES MUST BE ENCLOSED.

cutting line
3.2 , 6.3 , 12.5 , 12.5 (, , ,)

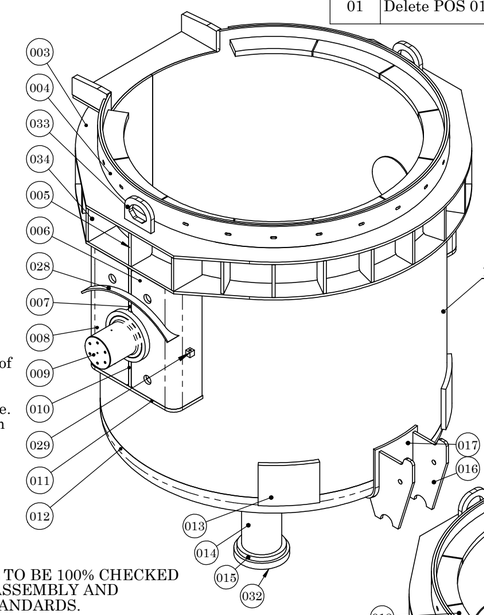

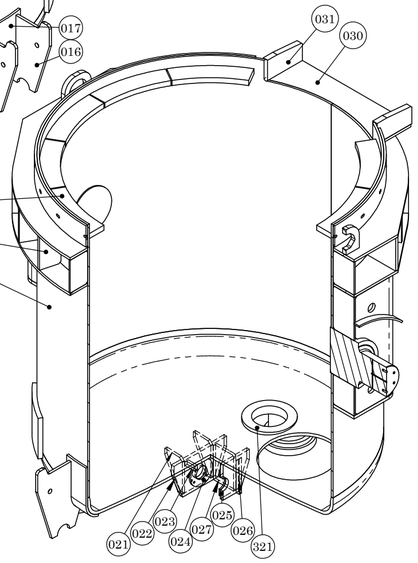

POS	QTY	DESCRIPTION	MATERIAL	UNIT MASS (kg)	TOTAL MASS (kg)	CODE No.	ASSY . CODE
034	04	PL 325x323x25	H II	-	-	-	3803050021
033	02	PL 300x250x40	H II	-	-	-	3803050021
032	03	PL ∅450x60	H II	-	-	-	3803050021
031	02	PL 397x200x50	H II	-	-	-	3803050021
030	01	PL 1300x400x25	H II	-	-	-	3803050021
029	02	Square EN10059 □50x50,L:50	H II	-	-	-	3803050021
028	02	PL 1080.5x105.5x15	H II	-	-	-	3803050021
027	01	PL 350x230x25	H II	-	-	-	3803050021
026	02	PL 350x35x30	H II	-	-	-	3803050021
025	01	PL 600x354x30	H II	-	-	-	3803050021
024	02	PL ∅250x15	H II	-	-	-	3803050021
023	01	PL 230x50x25	H II	-	-	-	3803050021
022	01	PL 600x354x30	H II	-	-	-	3803050021
021	03	PL 357x200x25	H II	-	-	-	3803050021
020	01	PL 8733.5x2700x20	H II	-	-	-	3803050021
019	18	PL 325x200x25	H II	-	-	-	3803050021
018	10	PL R:1380,r:1210 ,T:50	H II	-	-	-	3803050021
017	01	PL 599x482x20	H II	-	-	-	3803050021
016	02	PL 735x485x25	H II	-	-	-	3803050021
015	03	PL ∅400x40	H II	-	-	-	3803050021
014	03	PIPE ∅323.9x40,L:439.7	ST 55	-	-	-	3803050021
013	02	PL Lb:495.5,h:400,T:40	H II	-	-	-	3803050021
012	01	PL Lb: ≈ 3075,T:30	H II	-	-	-	3803050021
011	02	PL 1000x332x30	H II	-	-	-	3803050021
010	02	PL 295x240x30	H II	-	-	-	3803050021
009	02	∅450x658.6	C 22	-	-	-	3803050021
008	02	PL 1170x745.5x25	H II	-	-	-	3803050021
007	02	PL 425x240x30	H II	-	-	-	3803050021
006	02	PL 1170x745.5x25	H II	-	-	-	3803050021
005	02	PL 325x240x30	H II	-	-	-	3803050021
004	01	PL 7380x210x20	H II	-	-	-	3803050021
003	02	PL 3280x3200x25	H II	-	-	-	3803050021
321	01	POROUS PLUG	DWG	-	-	(BF50230.13)3009020019	3803050021
301	01	ASSEMBLY	-	10000	10000	3803050021	3803050012

UNLESS OTHERWISE WELDING

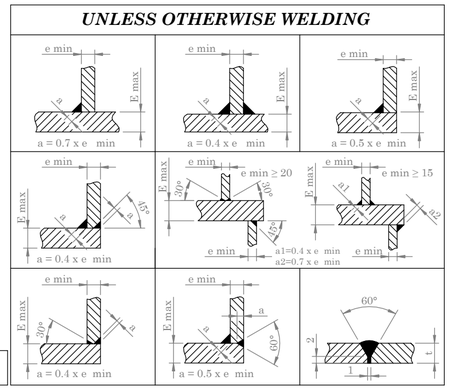

Heat treatment	Annealing

NOTE:
Dimension without tolerance follow:
ISO 2768-M
MATERIAL:
H II DIN 17155,Fe 410-1 KW UNI 5869
C22 DIN 17200 , C20 TD3 UNI 7874
ST 55 DIN 1629

	NAME	DATE
DES.		
DRA.	M.H.Tesahat	92/03/02
CHK.	A.Alamdar	92/03/03
APPR.	M.Minjalili	92/03/04

IRAN ALLOY STEEL CO

TITLE:

PLANT UNIT 03
LADLE BODY

ORDER.	RF6/7.B1	REF.DRAW	***SD1203M2901001301***	REV
CODE No.	3803050021	DWG No.	***FD1203M2901001301***	01
QCTM No.	BF50233.1	SCALE: 1 : 20	SIZE: A2	SHEET: 1 OF 5

Heat treatment	Annealing

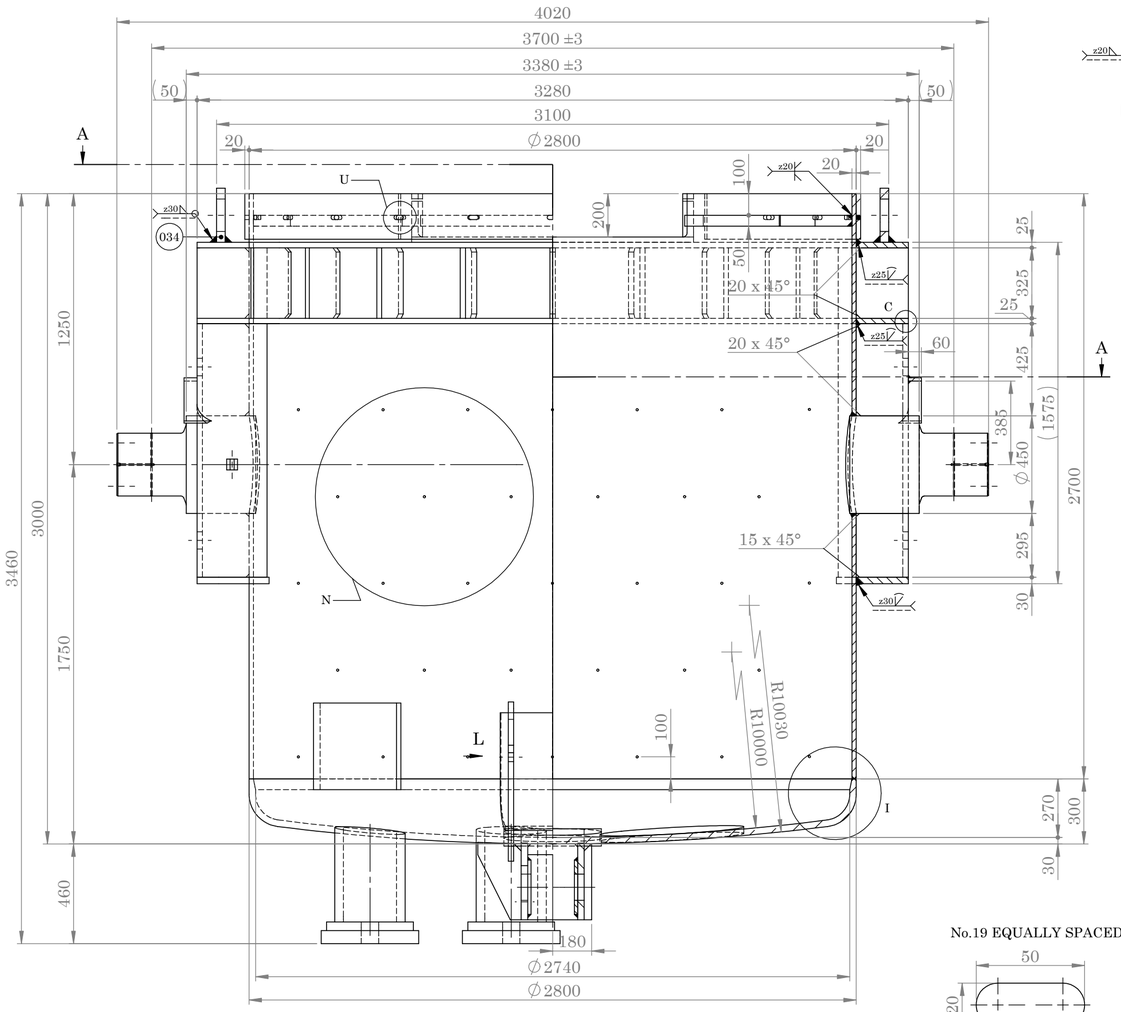

SECTION B-B
SCALE 1 : 20

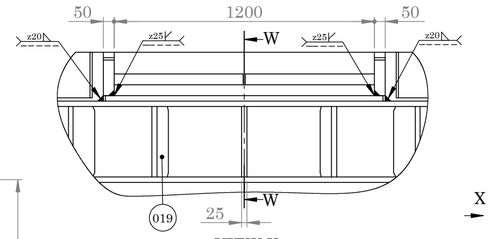

VIEW X
SCALE 1 : 20

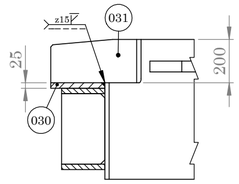

SECTION W-W

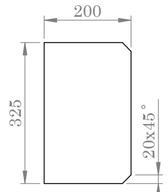

PIECE No. 019 (T:25)
SCALE 1 : 10

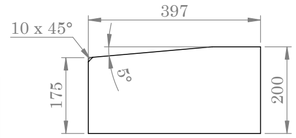

PIECE No. 031 (T:50)
SCALE 1 : 10

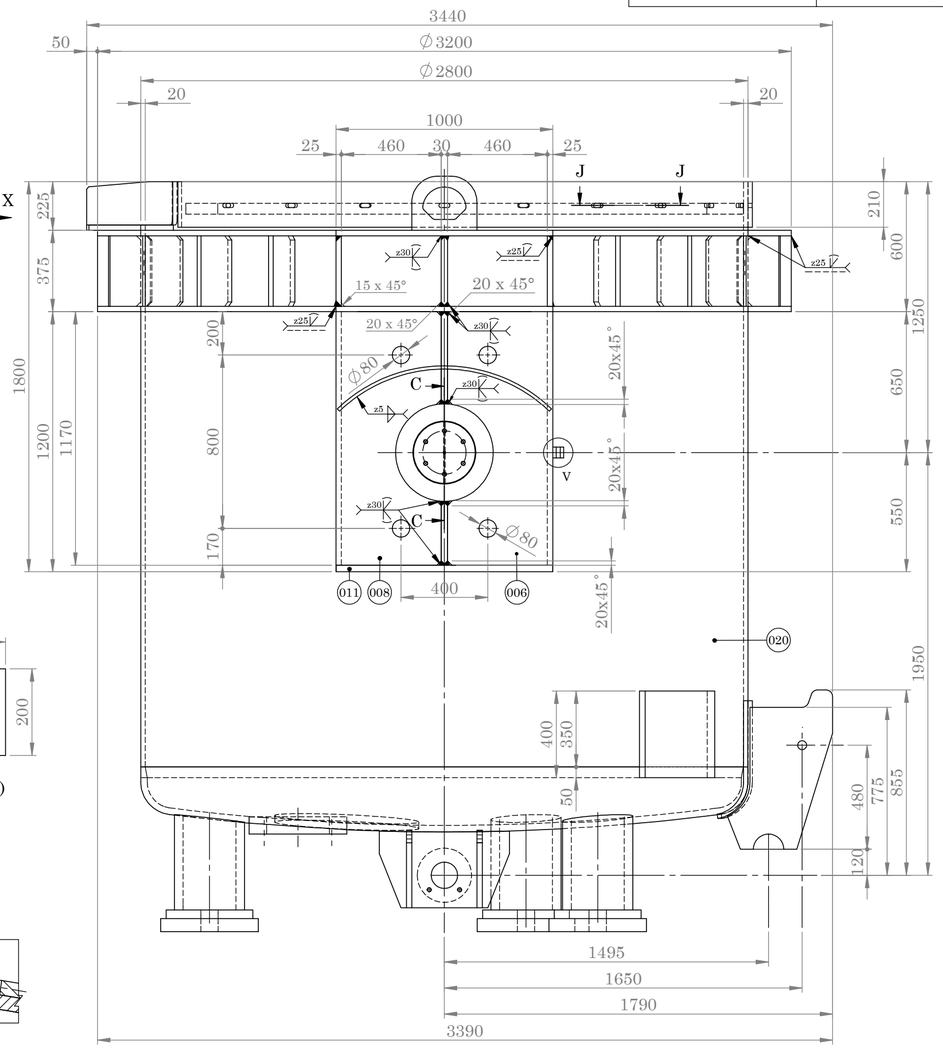

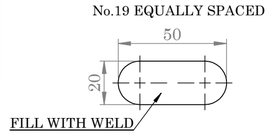

DETAIL U
SCALE 1 : 2

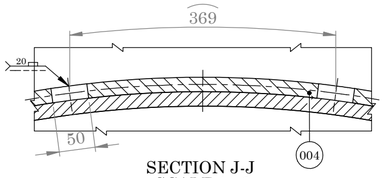

SECTION J-J
SCALE 1 : 6

MATERIAL : C22 DIN 17200 , C20 TD3 UNI 7874

PREMACHINED FORGES
SUPPLY FORGINGS ACCORDING TO STD .2.9.004
ACCEPTABLE DEGREES:
OUTSIDE : 1/3 rd OF THICKNESS OF CATEGORY 2
INSIDE : NUT IN CATEGORY 3

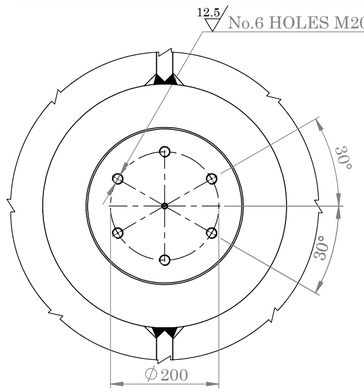

VIEW S
SCALE 1 : 8

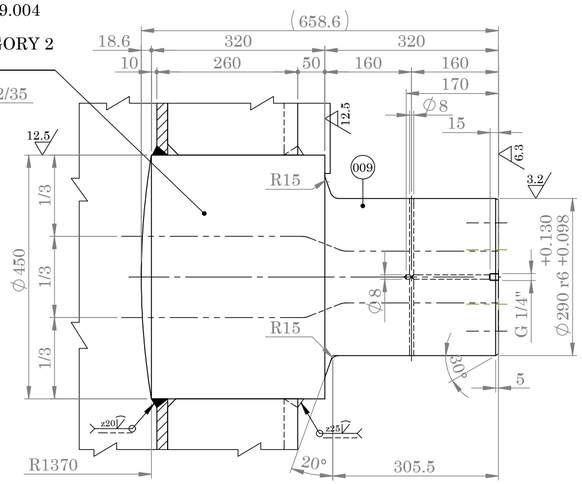

SECTION C-C
SCALE 1 : 8

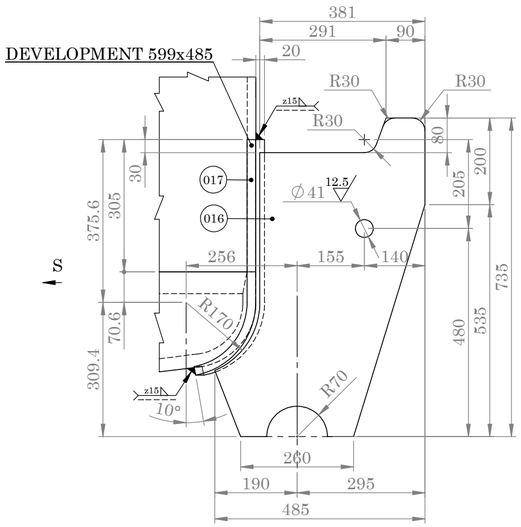

VIEW L
SCALE 1 : 10

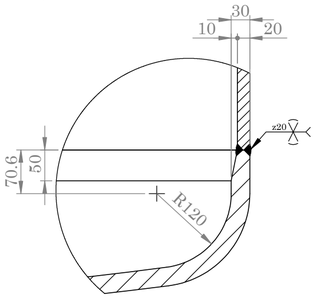

DETAIL I
SCALE 1 : 7

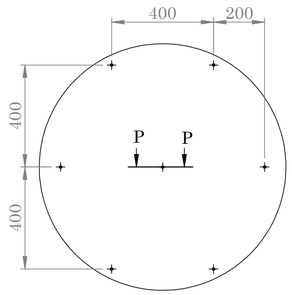

DETAIL N
SCALE 1 : 17

EXPANSION HOLES ∅10
TO CARRY ON ALL
BOTTOM SHELL AND
ON VERTICAL SURFACES
(MESH 400x400)

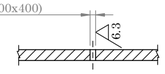

SECTION P-P
SCALE 1 : 8

cutting line
(3.2 , 6.3 , 12.5 , 12.5)

POS	QTY	DESCRIPTION	MATERIAL	MASS (kg) UNIT	MASS (kg) TOTAL	CODE No.	ASSY . CODE
301	01	ASSEMBLY	H II , C22 , ST 55	10000	10000	3803050021	3803050012

NOTE:
Dimension without tolerance follow:
ISO 2768-M
MATERIAL:
H II DIN 17155,Fe 410-1 KW UNI 5869
C22 DIN 17200 , C20 TD3 UNI 7874
ST 55 DIN 1629

	NAME	DATE
DES.		
DRA.	M.H.Tesahat	92/03/02
CHK.	A.Alamdar	92/03/03
APPR.	M.Mirjalili	92/03/04

TITLE:
PLANT UNIT 03
LADLE BODY

IRAN ALLOY STEEL CO

ORDER.	RF6/7.B1	REF.DRAW	***SD1203M2901001301*** REV
CODE No.	3803050021	DWG No.	***FD1203M2901001301*** 01
QCTM No.	BF50233.1	SCALE: 1 : 20	SIZE: A2 SHEET: 2 OF 5

REVISIONS			
REV.	DESCRIPTION	DATE	APPROVED
01	Delete POS 01 & 02 & Edit POS 20	1405/02/02	Sa.Oliaei

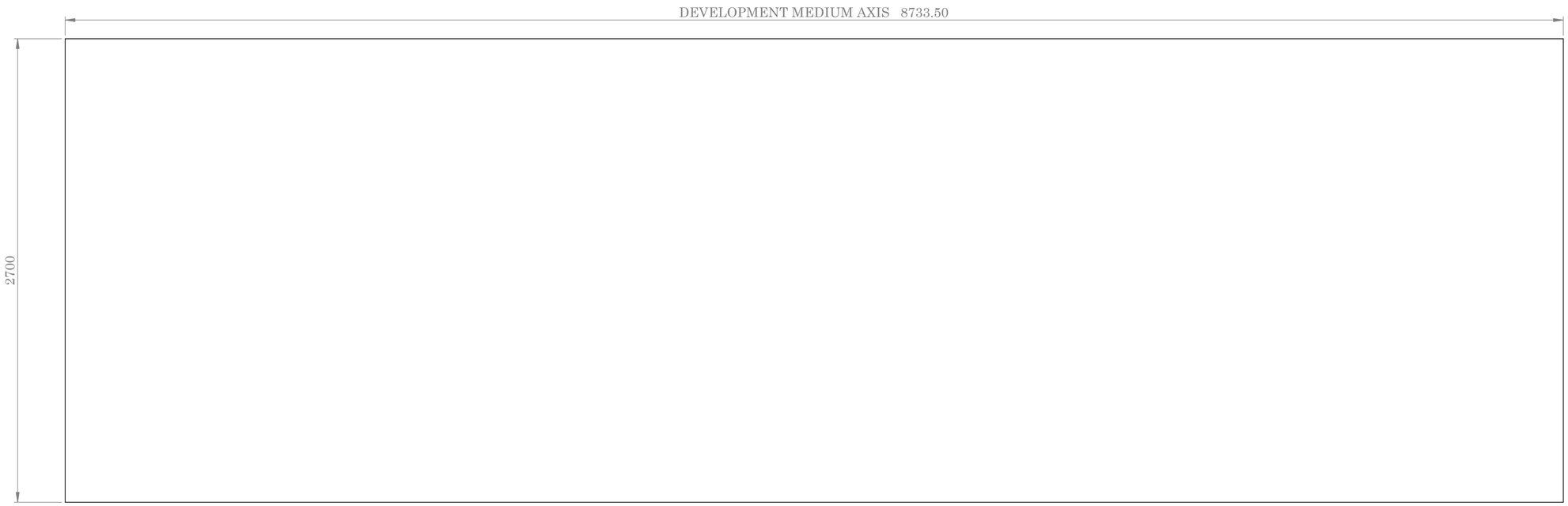

01 PIECE No. 020 (T=20)
SCALE 1:20

DETAIL OF SHELL PLATES WELDS

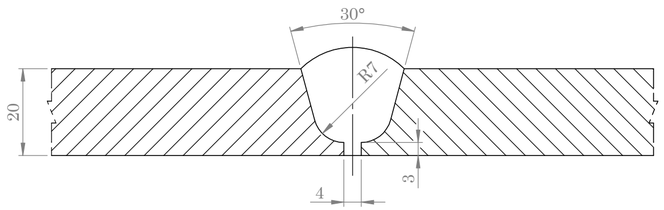

SCALE 1 : 1

cutting line
12.5 ( )

POS	QTY	DESCRIPTION	MATERIAL	MASS (kg) UNIT	MASS (kg) TOTAL	CODE No.	ASSY . CODE
020	01	PL 8733.5x2700x20	H II	-	-	-	3803050021
301	01	ASSEMBLY	-	10000	10000	3803050021	3803050012

NOTE:
Dimension without tolerance follow:
ISO 2768-M
MATERIAL:
H II DIN 17155,Fe 410-1 KW UNI 5869
X10CrNiTi18-10 E DIN EN 10095

	NAME	DATE
DES.		
DRA.	M.H.Fesahat	92/03/02
CHK.	A.Alamdar	92/03/03
APPR.	M.Minjalili	92/03/04

TITLE:
PLANT UNIT 03
LADLE BODY

IRAN ALLOY STEEL CO

ORDER.	RF6/7.B1	REF.DRAW	***SD1203M2901001301*** REV
CODE No.	3803050021	DWG No.	***FD1203M2901001301*** 01
QCTM No.	BF50233.1	SCALE: - : -	SIZE: A2 SHEET: 3 OF 5

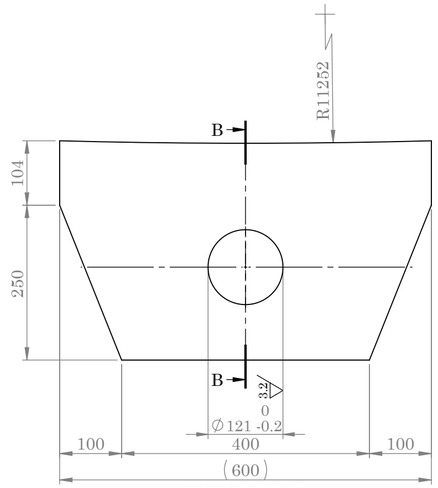

PIECE No. 025
SCALE 1 : 7

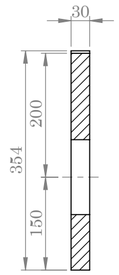

SECTION B-B
SCALE 1 : 7

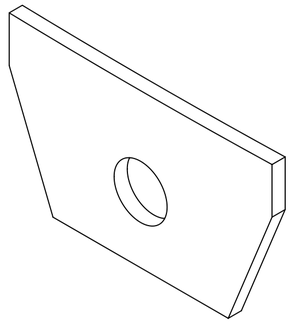

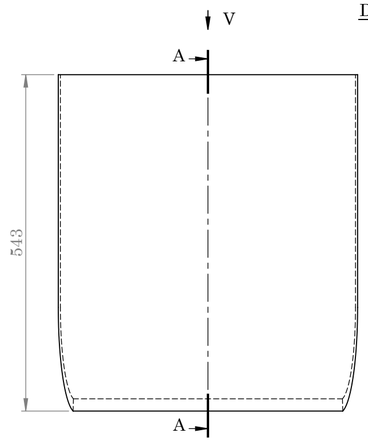

PIECE No. 017
SCALE 1 : 7

DEVELOPMENT 599x482

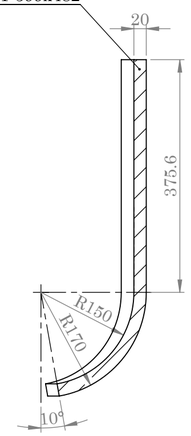

SECTION A-A
SCALE 1 : 7

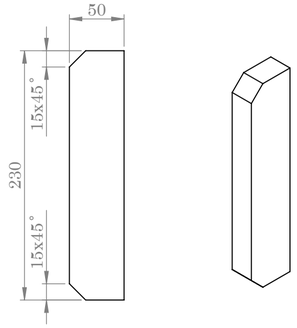

PIECE No. 023 (T=25)
SCALE 1 : 4

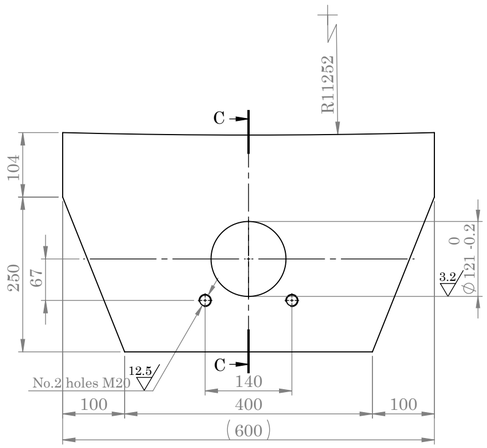

PIECE No. 022
SCALE 1 : 7

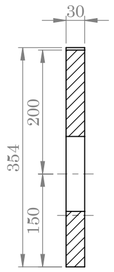

SECTION C-C
SCALE 1 : 7

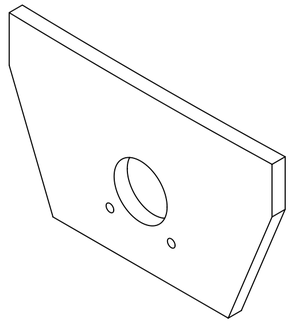

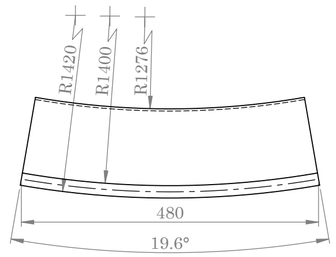

VIEW V
SCALE 1 : 7

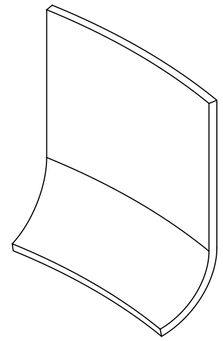

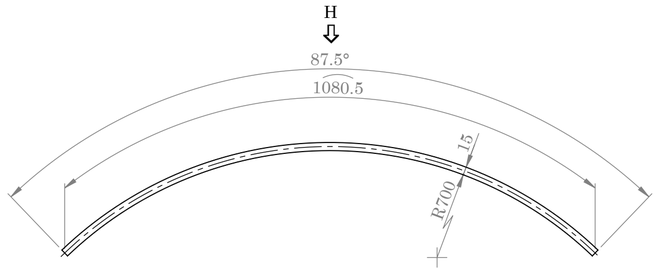

PIECE No.028
SCALE 1 : 8

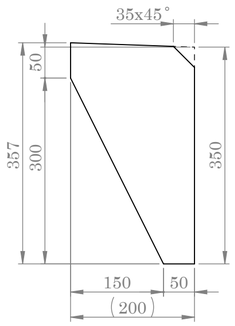

PIECE No. 021 (T=25)
SCALE 1 : 7

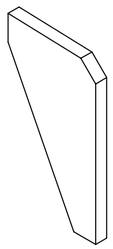

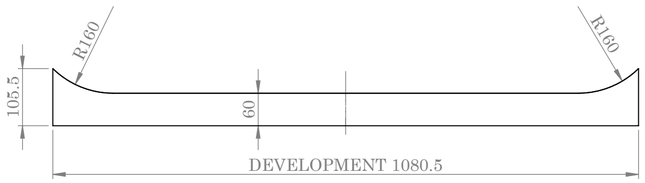

(DEVELOPMENT) VIEW H
SCALE 1 : 8

cutting line
3.2 (, 12.5 , 12.5)

POS	QTY	DESCRIPTION	MATERIAL	UNIT MASS (kg)	TOTAL MASS (kg)	CODE No.	ASSY . CODE
028	02	PL 1080.5x105.5x15	H II	-	-	-	3803050021
025	01	PL 600x354x30	H II	-	-	-	3803050021
023	01	PL 230x50x25	H II	-	-	-	3803050021
022	01	PL 600x354x30	H II	-	-	-	3803050021
021	03	PL 357x200x25	H II	-	-	-	3803050021
017	01	PL 599x482x20	H II	-	-	-	3803050021
301	01	ASSEMBLY	-	10000	10000	3803050021	3803050012

NOTE:
Dimension without tolerance follow:
ISO 2768-M
MATERIAL:
H II — DIN 17155
Fe 410-1 KW — UNI 5869

	NAME	DATE
DES.		
DRA.	M.H.Fesahat	92/03/02
CHK.	A.Alamdar	92/03/03
APPR.	M.Mirjalili	92/03/04

TITLE:
PLANT UNIT 03
LADLE BODY

IRAN ALLOY STEEL CO

ORDER.	RF6/7.B1	REF.DRAW	***SD1203M2901001301*** REV
CODE No.	3803050021	DWG No.	***FD1203M2901001301*** 00
QCTM No.	BF50233.1	SCALE: - : -	SIZE: A2 SHEET: 4 OF 5

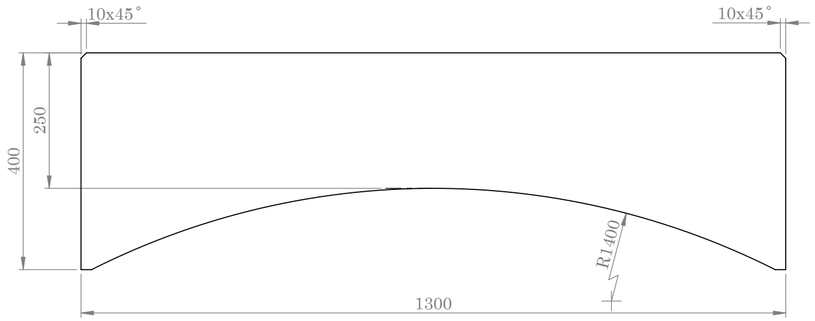

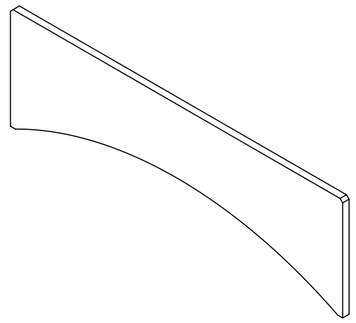

PIECE No.030 T:25
SCALE 1 : 8

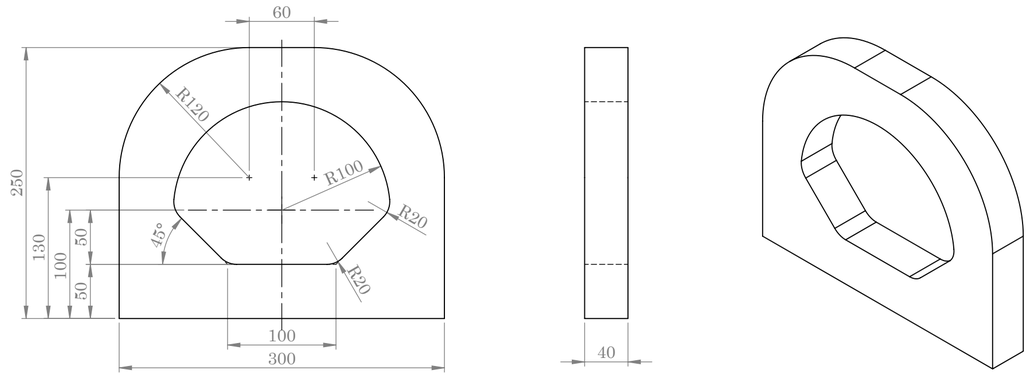

PIECE No.033
SCALE 1 : 4

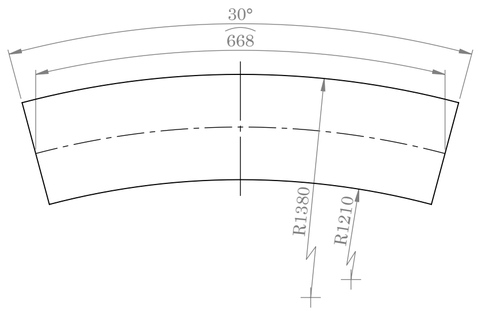

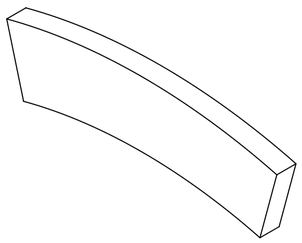

PIECE No.018 T:50
SCALE 1 : 7

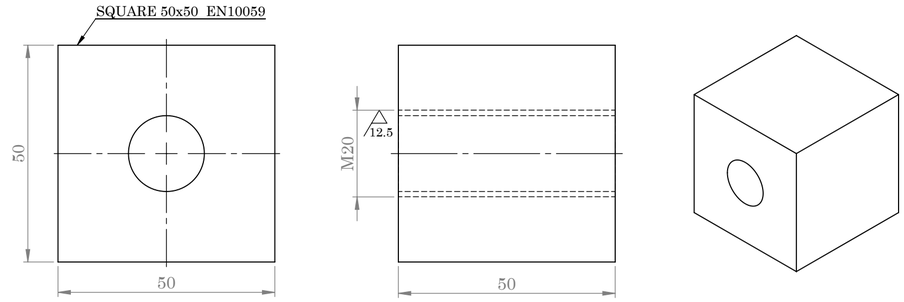

PIECE No.029
SCALE 1 : 1

cutting line

12.5 (, 12.5)

POS	QTY	DESCRIPTION	MATERIAL	MASS (kg) UNIT	MASS (kg) TOTAL	CODE No.	ASSY . CODE
033	02	PL 300x250x40	H II	-	-		3803050021
030	01	PL 1300x400x25	H II	-	-	-	3803050021
029	02	Square EN10059 50x50,L:50	H II	-	-	-	3803050021
018	10	PL R:1380,r:1210 ,T:50	H II	-	-	-	3803050021
301	01	ASSEMBLY	-	10000	10000	3803050021	3803050012

NOTE:
Dimension without tolerance follow:
ISO 2768-M
MATERIAL:
H II DIN 17155
Fe 410-1 KW UNI 5869

	NAME	DATE
DES.		
DRA.	M.H. Fesahat	92/03/02
CHK.	A.Alamdar	92/03/03
APPR.	M.Mirjalili	92/03/04

TITLE:
PLANT UNIT 03
LADLE BODY

IRAN ALLOY STEEL CO

ORDER.	RF6/7.B1	REF.DRAW	***SD1203M2901001301*** REV
CODE No.	3803050021	DWG No.	***FD1203M2901001301*** 00
QCTM No.	BF50233.1	SCALE: - : -	SIZE: A2 SHEET: 5 OF 5

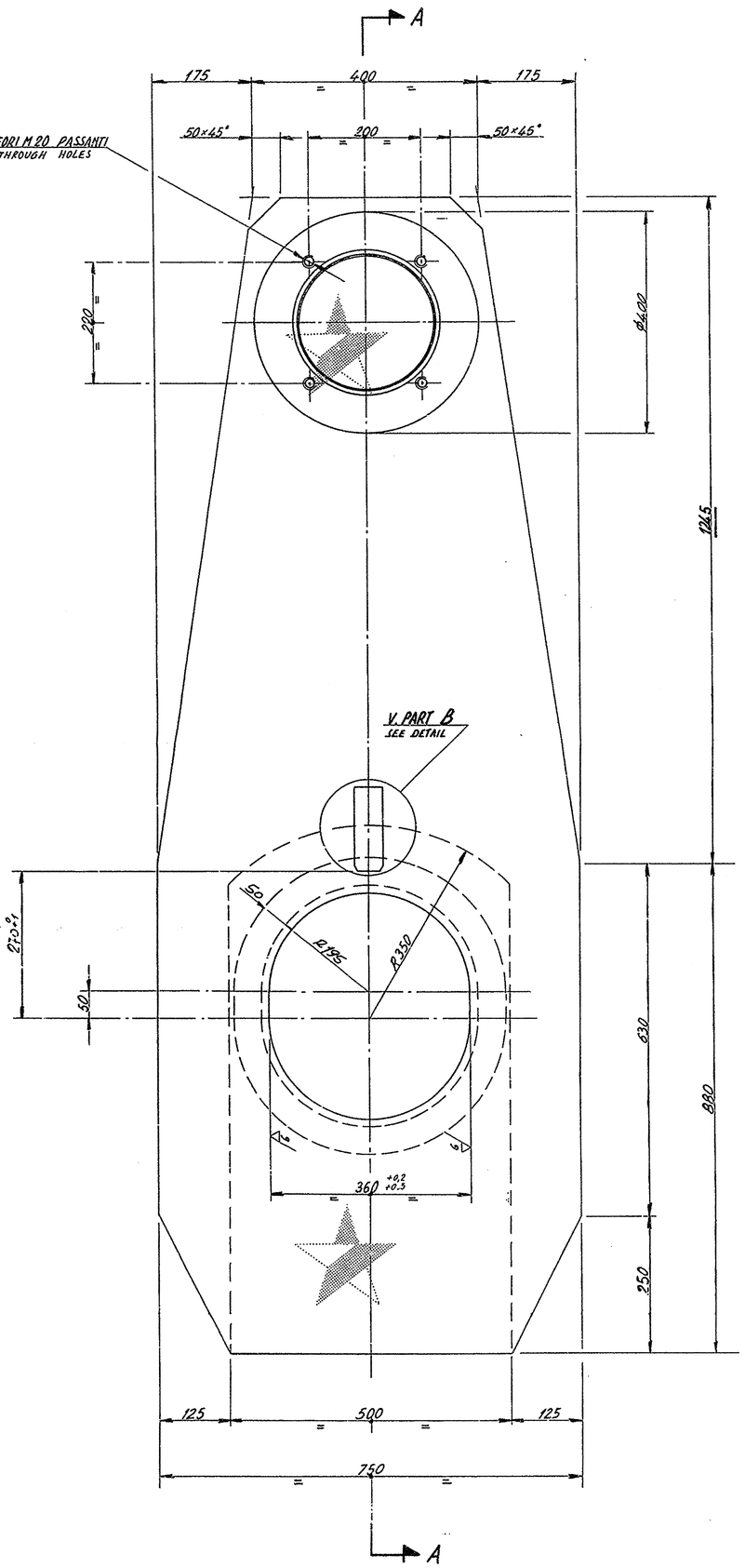

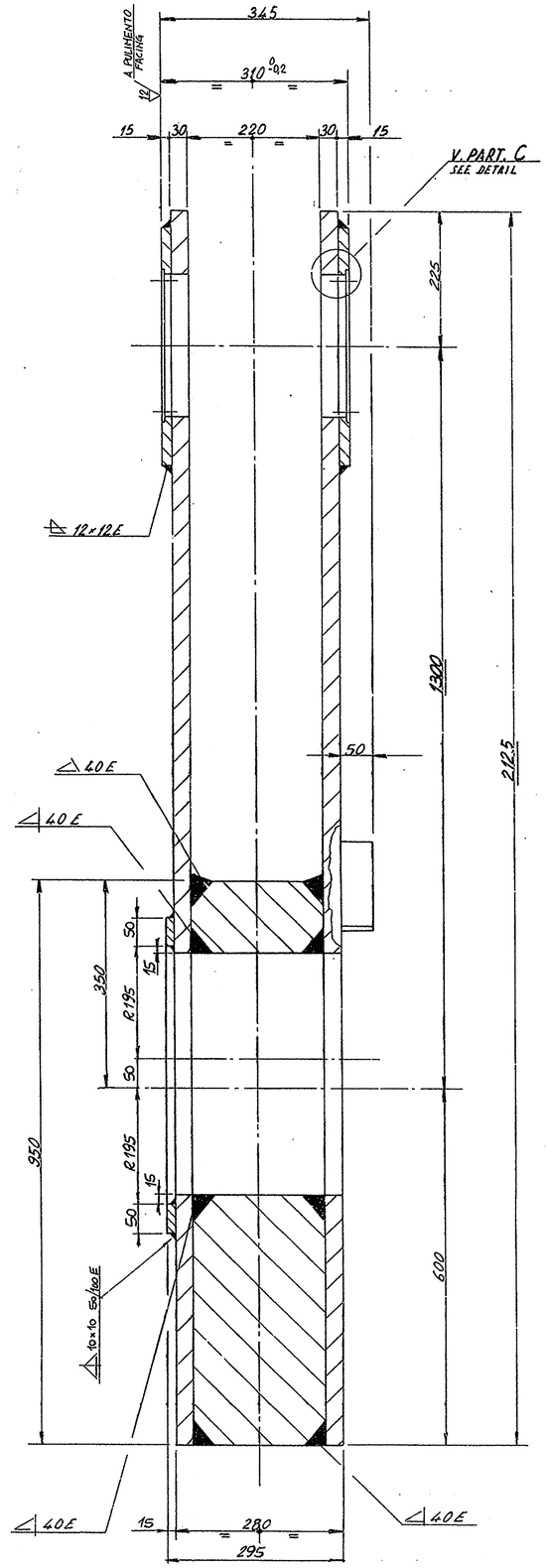

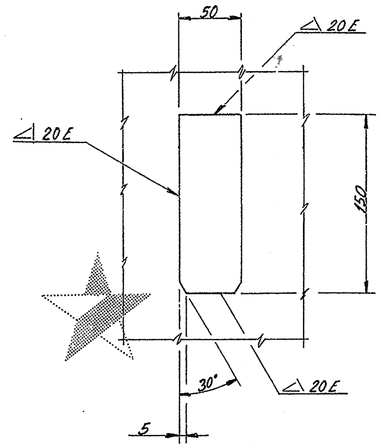

PARTICOLARE B
DETAIL

SCALA 1:2.5
SCALE

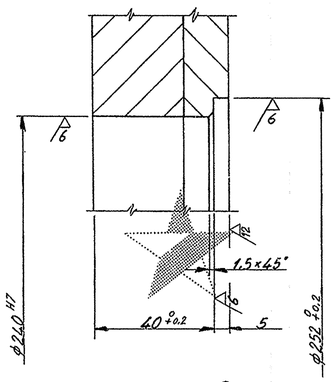

PARTICOLARE C
DETAIL

SCALA 1:1
SCALE

Ricavato da dis. 4.262867.C

NOTE:
LE LAMIERE DEL PRESENTE CORPO SONO DA CONTROLLARE AGLI ULTRASUONI PRECEDENTEMENTE ALL'ASSEMBLAGGIO E DOVRANNO RIENTRARE NELLA CLASSE 2 DELLA UNI 5329-63.

TUTTE LE SALDATURE DEVONO ESSERE CONTROLLATE AL 100% DELLO SVILUPPO CON ESAME RADIOGRAFICO (RAGGI X) E CONTROLLO AGLI ULTRASUONI.

IL GRADO DI ACCETTABILITA' DELLE SALDATURE SI RIFA' AL RAGGRUPPAMENTO "E" DELLA UNI 7278-74 ANCHE SE QUESTA RIGUARDA SOLO I "GRADI DI DIFETTOSITA' NELLE SALDATURE TESTA A TESTA RIFERITI AL CONTROLLO RADIOGRAFICO".

I PROCEDIMENTI DI SALDATURA DEVONO ESSERE QUALIFICATI TENENDO CONTO DELL'ACCIAIO UTILIZZATO PER IL CORPO SIVIERA E DELLA TEMPERATURA DI LAVORO DELLO STESSO (400°C).

TUTTE LE SALDATURE DOVRANNO PRESENTARE LE STESSE CARATTERISTICHE DEL MATERIALE BASE.

ALLEGARE IL CERTIFICATO DEI PROCEDIMENTI DI SALDATURA E LA QUALIFICA DEI SALDATORI.

ALLEGARE CERTIFICAZIONE DI COLATA (ANALISI CHIMICA).

ALLEGARE CERTIFICATI DI PROVE MECCANICHE.

NOTE:
THE STEEL SHEETS OF THE ANNUAL BODY ARE TO BE 100% CHECKED WITH ULTRASONIC WAVES PREVIOUS TO THE ASSEMBLY AND MUST FALL IN CATEGORY 2 OF THE UNI 5329-63 STANDARDS.

ALL WELDINGS MUST BE 100% CHECKED THROUGH WITH RADIOGRAPHIC INSPECTION (X-RAYS) AND ULTRASONIC WAVES CONTROL.

THE ACCEPTABLE DEGREE OF THE WELDINGS MUST COMPLY WITH THE "E" GROUPINGS OF THE UNI 7278-74 STANDARDS EVEN IF THIS STD CONCERNS ONLY THE "DEGREES OF FAULTS IN THE HEAD TO HEAD WELDINGS IN REFERENCE TO THE X-RAYS CONTROL".

THE WELDING PROCEDURE MUST BE QUALIFICATE ACCORDING TO THE STEEL OF THE LADLE BODY AND ITS WORKING TEMPERATURE (400°C).

ALL WELDINGS MUST HAVE THE SAME CHARACTERISTICS OF THE BASIC MATERIAL.

THE WELDINGS PROCEDURE CERTIFICATE AND WELDERS QUALIFICATION MUST BE ENCLOSED.

THE CASTING CERTIFICATE (CHEMICAL ANALYSIS) MUST BE ENCLOSED.

THE MECHANICAL TESTING CERTIFICATES MUST BE ENCLOSED.

REV.	FILE	DATE DATA	DESCRIPTION DESCRIZIONE	Drawn Disegnato	Checked Control.	Approved Approvato	Issue Viale
1	C M C M C M C M	06/94	ISSUED FOR INFORMATION	SOODRMAN	DE CORTI	STUCCHI	

REVISIONI—REVISIONS

MINISTRY OF MINES AND METALS

NISCO

ALLOY STEEL PROJECT

YAZD - IRAN

APPROVED:

DVAI/BÖHLER
CONSULTANT ENGINEER

APPROVED: A102RQ23/8

DANIELI CONSORTIUM MITSUBISHI CORPORATION

Item—Pos.	Unit — Gruppo
302	SD1103T2901200

Material — Materiale: P265GH EN 10028-2

Header treatment — Tratt. termico: STRESS RELIEVING

MODELLO—PATTERN | J=m.r²(Kg m²)

CODE — CODICE	CLASSIFICATION — CLASSIFICAZIONE	Obtained from — Ricav. da	Replace — Sostituisce
4.333173.R			

DRAWING — DISEGNO

TITLE — TITOLO:
PLANT UNIT 03
LEVER

1:5

Scale — Scala: 1:2.5 — 1:1

Mass — Massa: 1150

Size — Form.: A1

Sheet Foglio: 1

Follow Segue: /

Rev.: 1

DRAWING — DISEGNO: SD1103T2901200302

Rev.: 1

COMPUTER AIDED DESIGN

IRAN ALLOY STEEL CO.			شرکت فولاد آلیاژی ایران	
Date	1405/02/05	دفترچه مشخصات فنی Technical Specification Document	Document No	BI30117
IASCo Code	4.333173.R		Material	-
Description	LEVER		POS	302

1– بازرسی

	DESCRIPTION OF TEST		STD TEST	INSPECTION TYPE	REQUIRED TEST	SPECIFICATION		
1	*Analyze of material*		*Report of a valid laboratory/company*	*R*	✓	-		
2	*Visual and dimensional check*		*Dwg & Specif.*	*R*	✓	*Check by **Tool***		
3	*Fit up*	*Assembly*	-	*W*	✓	-		
		Beveling & Gap check & Hi-lo	*DANIELI 2.8.114* *DANIELI 2.8.115*					
4	*NDT on welding*		*DANIELI 2.8.114* *DANIELI 2.8.115*	*H*	✓	*VT / DT %*	*MT %*	-
						%100	*%100*	-
						Acceptance criteria according to AWS D14.4/D14.4M		***II***
5	*NDT on casting*		*DANIELI 2.8.004* *DANIELI 2.8.005* *DANIELI 2.8.017*	*H*		*VT / DT %*	*PT %*	*UT %*
						-	-	-
						Case of Casting		-
6	*NDT on forging & rolled bars*		*DANIELI 2.8.001* *DANIELI 2.8.009*	*R*	✓	*VT / DT %*	*PT %*	*UT %*
						-	-	*%100*
						Forging or Rolled bar class		***C***
7	*Tensile test*		*ISO 6892*	*R*	✓	***for St52***		
8	*Impact test*		*ISO 148*	*R*		-		
9	*Metallographic structure*		*DANIELI 2.8.004* *DANIELI 2.8.017*	*R*		-		
10	*Elastomer properties*		*ASTM D 2240* *ASTM D 395*	*R*		*Hardness:*	-	
						% Compression set:	-	
11	*Heat treatment cycle*		*DANIELI 2.8.300* *DANIELI 2.8.101*	*R*	✓	*Cycle*	*Stress relieving*	-
						Hardness	-	-
						Depth	-	-
12	*Coating*		*Report of a valid laboratory or company*	*R*		*Type*	-	
						Hardness	-	
						Thick	-	
13	*Balancing*		*ISO1940-1*	*R*		*Speed:*	-	*Quality grade:* -
14	*Pressure test / leak test*		*DANIELI 2.8.102*	*W*		-		
15	*Surface Protection inspection, painting*		*DANIELI 2.8.302*	*R*	✓	*Cycle:*	*K*	***RAL: Inorganic zinc color***
16	*Marking & Packing*		*DANIELI 2.8.002*	*W*	✓	*Marking with Engraving*		
						-		

R(REVIEW) : بررسی مدارک QC سازنده H(HOLD) : ادامه تولید با اجازه بازرسِ کارفرما W(WITNESS): الزام هماهنگی با بازرسِ کارفرما جهت اجرای فرآیند

REVISIONS			
REV.	DESCRIPTION	DATE	APPROVED
01	ADD PIECE NO.006 (PL 60x15,Lb:1080)	92/03/05	A.Alamdar

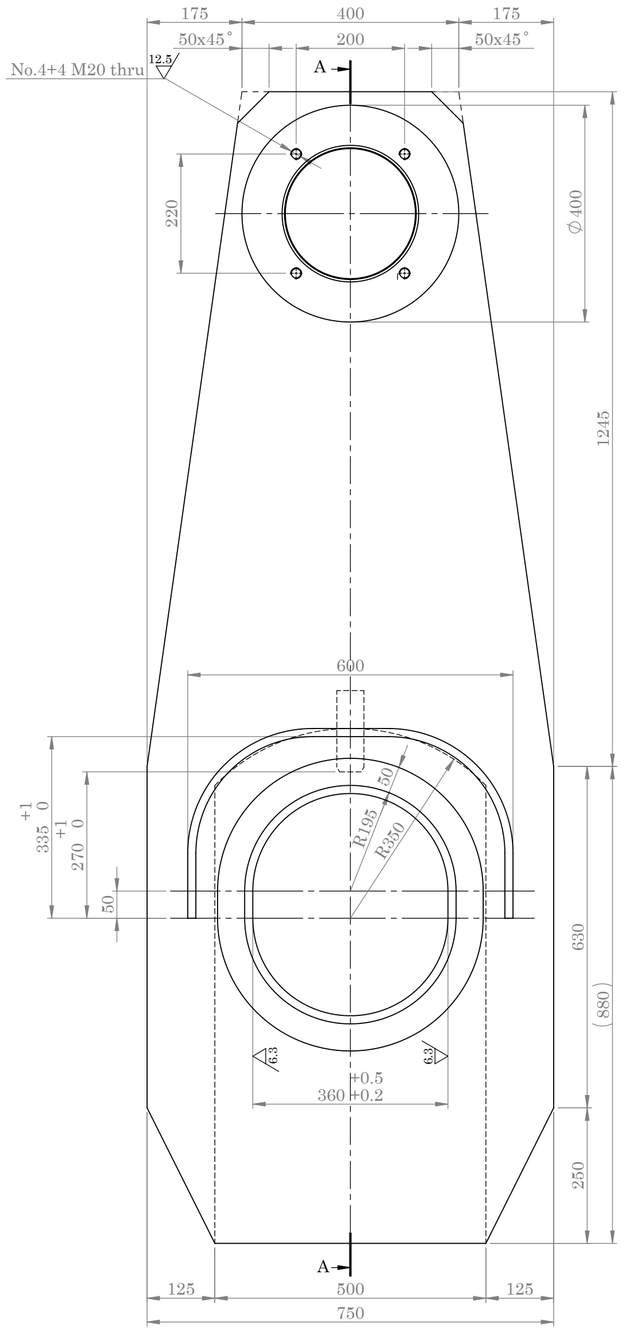

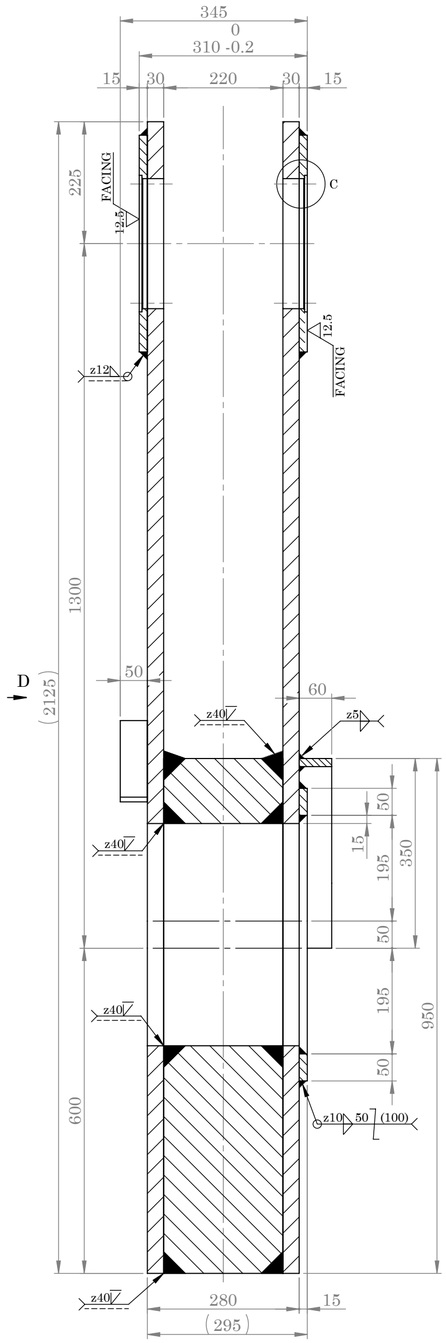

SECTION A-A
SCALE 1 : 8

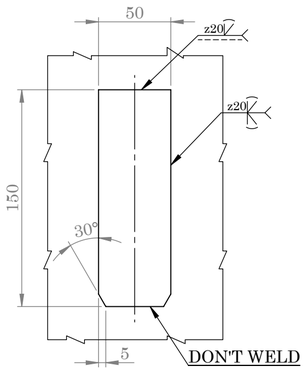

VIEW D
SCALE 1 : 3

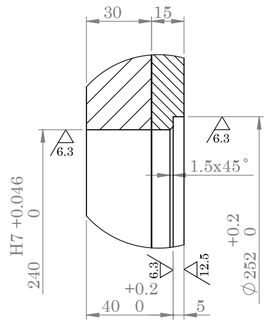

DETAIL C
SCALE 1 : 2

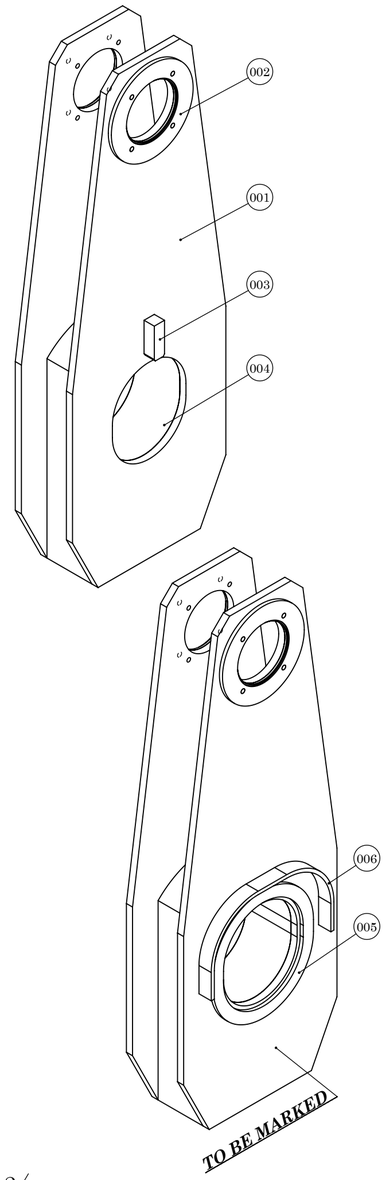

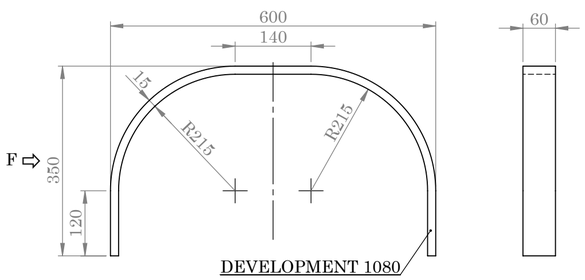

PIECE No.006
SCALE 1 : 8

VIEW F
SCALE 1 : 8

Note:

The steel sheets of the actual body are to be 100% checked with ultrasonic waves previous to the assembly and must fall in category 2 of the uni 5329-63 standards.

All weldings must be 100% checked through with radidgraphic inspection (x-rays) and ultrasonic waves contrul.

The acceptable degree of the weldings must comply with the "E" groupings of the uni 7278-74 standards even if this std concerns only the"degrees of faults in the head to head weldings in reference to the x-rays control".

The welding proceoure must be qualificate according to the steel of the ladle body and its working temperature(400˚c).

All weldings must have the same characteristics of the basic material.

The weldings procedure certificate and welders qualification must be enclosed.

The casting certificate (chemical analysis)must be enclosed.

The mechancal testing certificates must be enclosed.

P265GH equal ST 44-2
Heat treatment:Stress relieving

(12.5 , 6.3 , 3.2)

POS	QTY	DESCRIIPTION	MATERIAL	MASS (kg) UNIT	MASS (kg) TOTAL	DANIELI CODE	ASSY . CODE
006	01	PL 60x15,Lb:1080	P265GH	-	-	-	4.333173.R
005	01	PL 540x590x15	P265GH	-	-	-	4.333173.R
004	01	PL 950x500x220	P265GH	-	-	-	4.333173.R
003	01	SQUARE 50x50,L:150	P265GH	-	-	-	4.333173.R
002	02	PL Ø400x15	P265GH	-	-	-	4.333173.R
001	02	PL 2125x750x30	P265GH	-	-	-	4.333173.R
302	01	ASSEMBLY	-	1150	1150	4.333173.R	-

NOTE:
Dimension without tolerance follow:
ISO 2768-M
Material:
P265GH EN 10028-2

	NAME	DATE
DES		
DRA	A.ALAMDAR	90/11/12
CHK.	M.MIRJLILI	90/11/13
APPR	M.farrokhi	90/11/14

TITLE:
PLANT UNIT 03
LEVER

ATYCo

IRAN ALLOY STEEL CO

ORDER	RI34/4	REF.DRAW	SD1103T2901200302
CODE NO.	4.333173.R	DWG NO.	ID1103T2901200302
QCTM NO.	BI30117	SCALE: 1 : 8	SIZE: A2

REV 01

SHEET: 1 OF 1

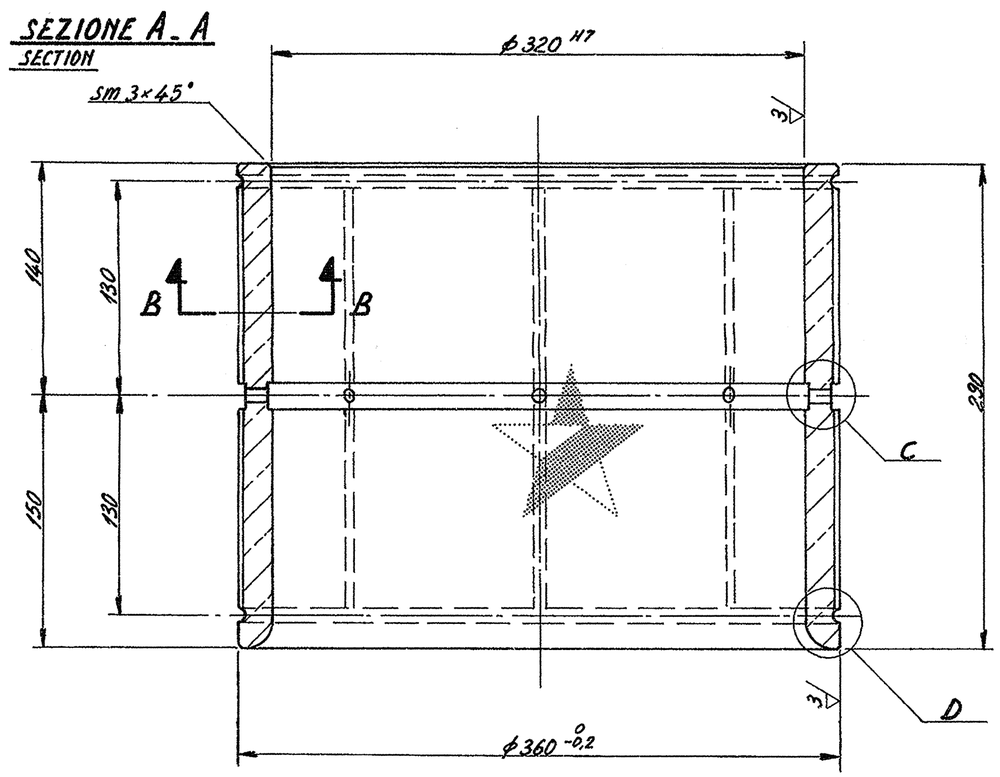

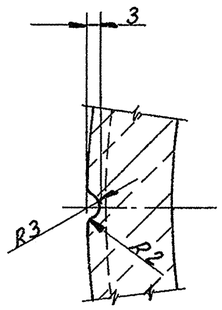

SEZIONE B_B SCALA 1:1
SECTION SCALE

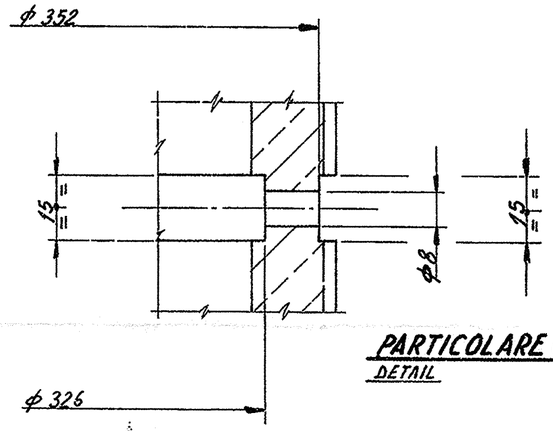

PARTICOLARE C SCALA 1:1
DETAIL SCALE

SPAZIO RISERVATO – SPACE RESERVED

Simile a dis. 4.262763.k

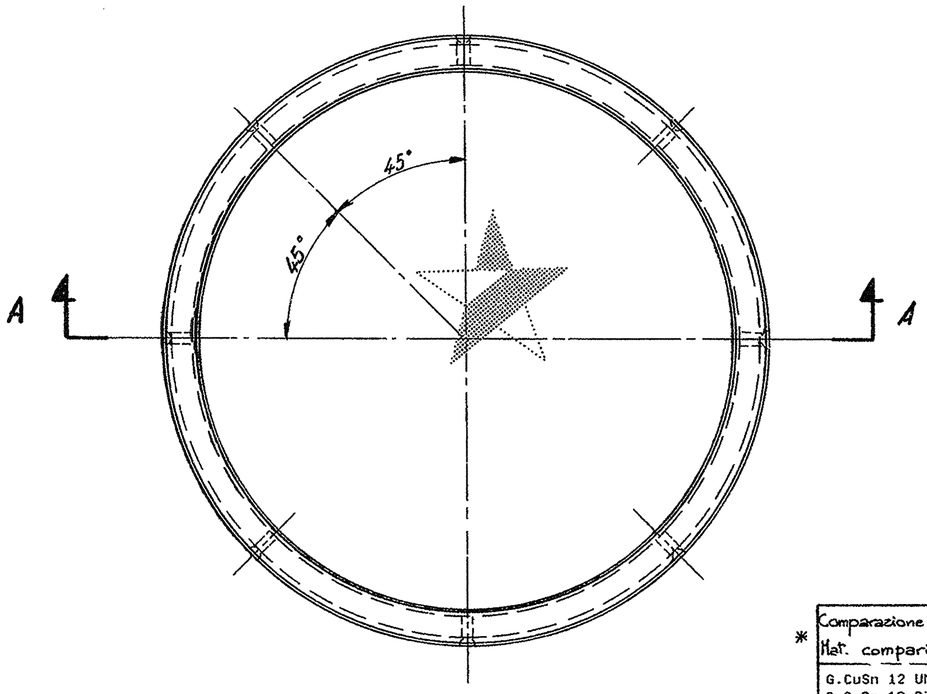

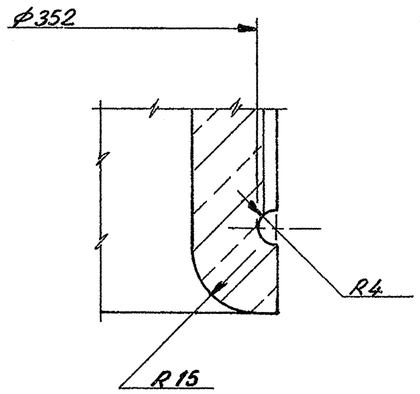

PARTICOLARE D SCALA 1:1
DETAIL SCALE

REV.	FILE	DATE DATA	DESCRIPTION DESCRIZIONE	Drawn Disegnato	Checked Control.	Approved Approvata	Issue Vista
1	C M	06/94	ISSUED FOR INFORMATION	SODORMAN	DE CORTI	STUCCHI	

REVISIONI–REVISIONS

MINISTRY OF MINES AND METALS

NISCO

ALLOY STEEL PROJECT

YAZD - IRAN

ورود به دفتر اسناد فنی
شماره: ۱۸۵/۴۰۱۲
تاریخ: ۷۹/۶/۲۰

APPROVED:
مرکز اسناد فنی
کنترل شد
تاریخ: ۷۹/۶/۲۰
شرکت فولاد آلیاژی ایران

DVAI/BÖHLER
CONSULTANT ENGINEER

APPROVED: A102Ra 23/9

DANIELI CONSORTIUM MITSUBISHI CORPORATION

CODE – CODICE	CLASSIFICATION – CLASSIFICAZIONE	Obtained from – Ricav. da	Replace – Sostituisce
4.262868.L			

DRAWING – DISEGNO

Rev. 1

TITLE – TITOLO:
PLANT UNIT 03
CONTOURED BUSHING

Scale – Scala (1:2.5) 1:1

Mass – Massa 52

Size – Form. A2

Sheet Foglio 1

Follow Segue /

DRAWING – DISEGNO
SD1103T2901200303

Rev. 1

Item–Pos.	Unit – Gruppo
303	SD1103T2901200

Material – Materiale
G.Cu.S.n12 DIN 1705

Header treatment – Tratt. termica

MODELLO–PATTERN | J=m.r²(Kg m²)

* Comparazione mat.
Mat. comparison

G.CuSn 12 UNI 7013
G.CuSn 12 DIN 1705
ASTM B301 A

CHAMFERED WITHOUT DIMENSIONED 2×45°
RADIUS WITHOUT DIMENSIONED
GENERALE MACHINING TOLLERANCES DEVIATIONS FOR DIMENSIONS WITHOUT TOLLERANCE TO SPECIFIED UNI 5307-63

COMPUTER AIDED DESIGN

REVISION HISTORY				
ZONE	REV	DESCRIPTION	DATE	APPROVED

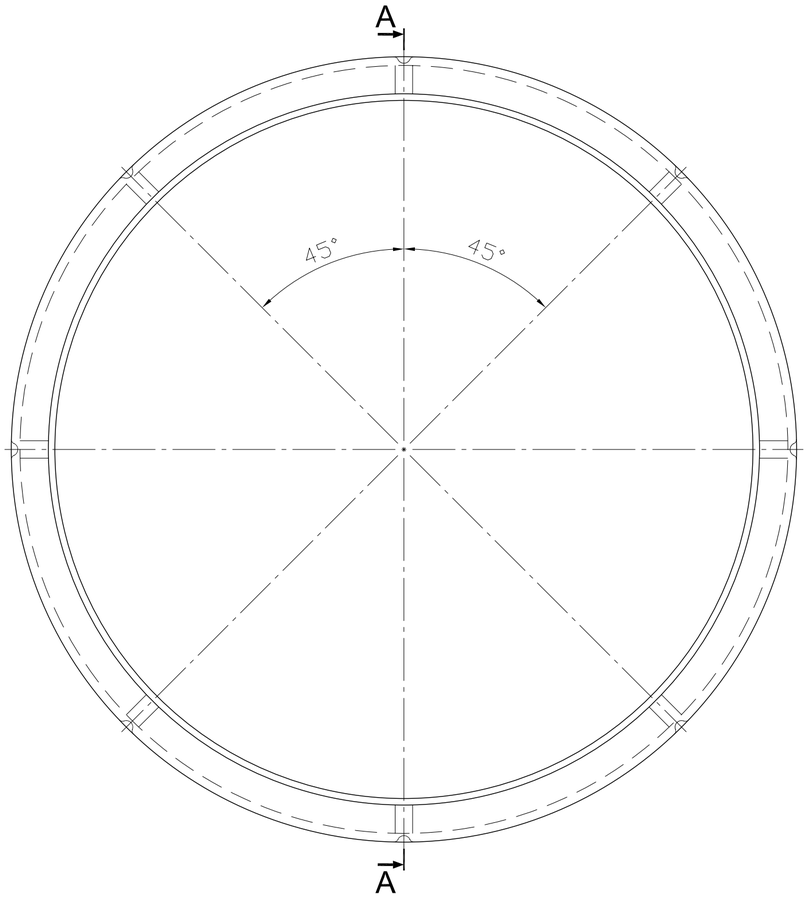

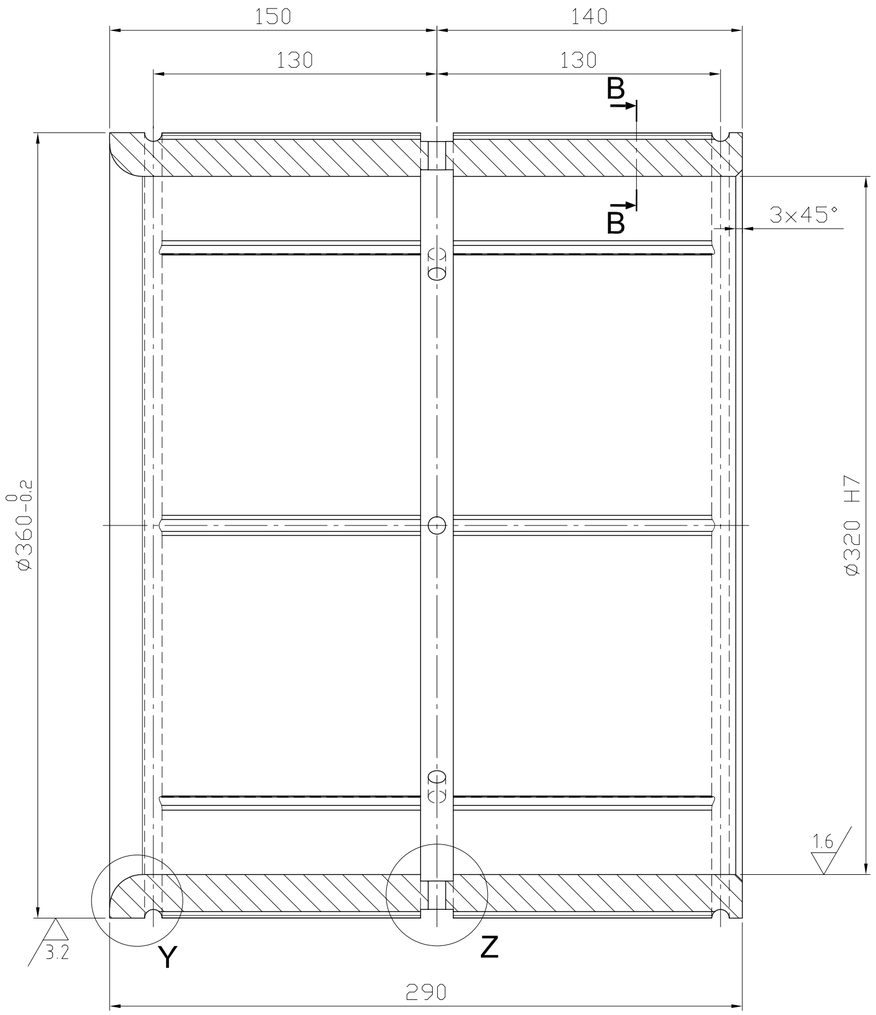

SEC. A-A

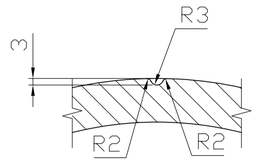

SEC. B-B

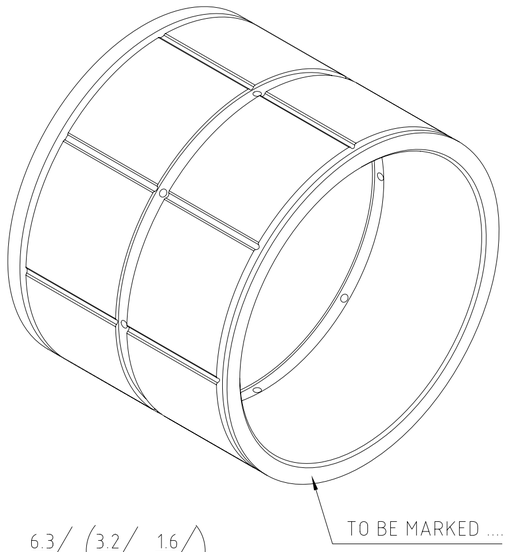

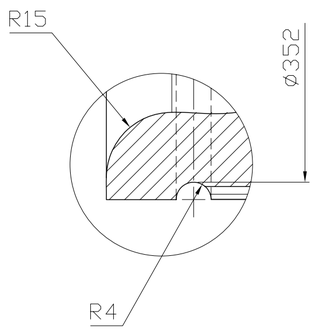

DET. Y

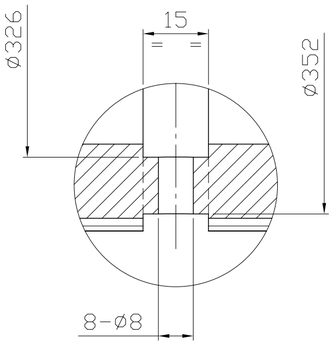

DET. Z

6.3 (3.2 1.6)

NOTE :

- OTHER CHAMFERS : 2x45°
- STRESS RELIEVE AFTER CASTING

POS.	QTY.	DESCRIPTION	MATERIAL	UNIT MASS(Kg)	TOTAL MASS(Kg)	REMARK
–	–	BUSH	G-CuSn12(DIN 1705)	52	52	TD1103T2901200303

TARH POOYAN ARYAN

DIMENSIONAL TOLERANCES FOR FEATURES WITHOUT INDIVIDUAL TOLERANCE INDICATIONS ACC. TO : ISO 2768/1 m

GEOMETRICAL TOLERANCES FOR FEATURES WITHOUT INDIVIDUAL TOLERANCE INDICATIONS ACC. TO : ISO 2768/2 K

SHEET : 1 OF 1 | BT : 10842

CODE NO. : 4.262868.L

IRAN ALLOY STEEL CO.

SCALE: 1:2 | SIZE: A2

	DATE	NAME
DES.	-	-
DRA.	89.01	A-NI
CHK.	89.01	N-DA
APPR.	89.01	K-SH
ORDER: RT 135/15		

(TITLE)

CONTOURED BUSHING

(DWG.NO.) TD1103T2901200303

REV. 0

REFRENCE: SD1103T2901200303

ø320	H7	$^{+0.057}_{0}$ $^{320.057}_{320}$
Dimen.	Fit	

* Comparazione mat. / Mat. comparison
C 40 TD3 UNI 7845
CK 45 DIN 17200
ASTM A235 Grade E

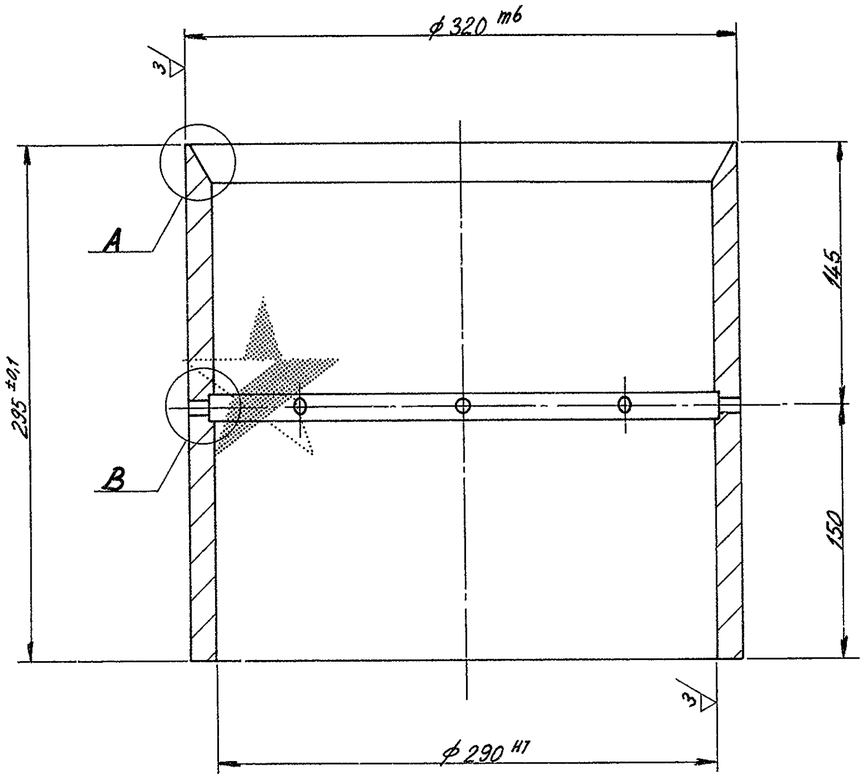

TOLLERANZE GENERALI DI LAVORAZIONE
Scostamenti per quote senza tolleranze
secondo norma N. 2.4.016

GENERAL MACHINING TOLERANCES
Deviations for dimensions without
tolerance to spec. N. 2.4.016

6 [3]

SPAZIO RISERVATO – SPACE RESERVED

Simile a dis. 4.262762.H

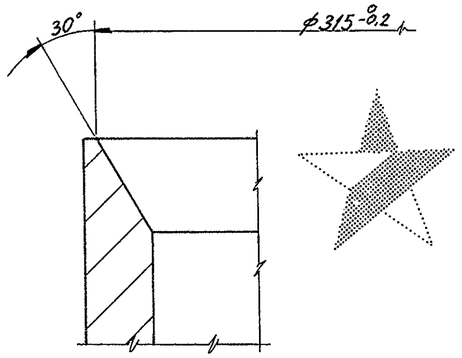

PARTICOLARE A — SCALA 1:1
DETAIL — SCALE

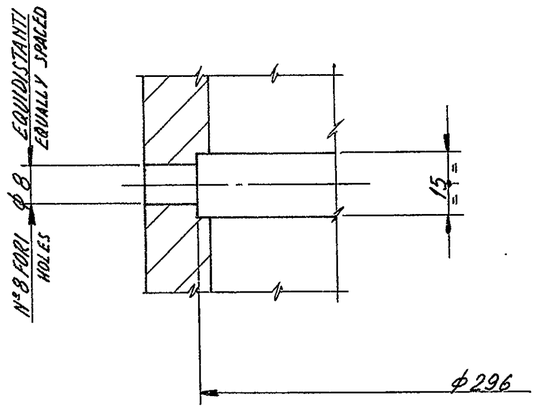

PARTICOLARE B — SCALA 1:1
DETAIL — SCALE

REV.	FILE	DATA DATE	DESCRIZIONE DESCRIPTION	DISEGNATO DRAWED	CONTROL. CHECKED	APPROVATO APPROVED
	C					
	M					
	C					
	M					
	C					
	M					
02	C	03/98	AGGIORNATO MATERIALE	MAURIZIO		
	M					

REVISIONI – REVISIONS

GRUPPO - UNIT	POS. - ITEM	GRUPPO - UNIT	POS. - ITEM	GRUPPO - UNIT	POS. - ITEM
				8.045056.F	304

RIFERIMENTI - REFERENCES

COMMESSA N. - JOB N.	PEZZI N. / N. OF PARTS	N. PROGRESSIVO / PROGRESSIVE N.

MATERIALE - MATERIAL *	MODELLO N. - PATTERN N.	TRATTAMENTI TERMICI - HEAT TREATMENTS
2C40 EN 10083		

DANIELI

SCALA / SCALE	MASSA (Kg) / MASS	J=M x R² (Kg x m²)	CLASSIFICAZIONE / CLASSIFICATION	FORM. / SIZE
1:2.5, 1:1	33		4055	A2

A termini di legge ci riserviamo la proprietà di questo disegno con divieto di riprodurlo o di renderlo comunque noto a terzi o a ditte concorrenti, in tutto o in parte, senza specifica autorizzazione scritta della Direzione Danieli.

All rights reserved including the right to reproduce or disclose to third parties this drawing or portion thereof without the specific written authorisation of Danieli's Management.

OGG. - RE.:
TITOLO - TITLE: BUSSOLA / BUSH

DISEGNATO DRAWED	CONTROL. CHECKED	APPROVATO APPROVED
C.G.H.	Maurizio	
Data Date 02.03.98	Data Date 02.03.98	Data Date

4.262869.M

FORMATO – A2 – 420 x 594

EUROPEAN PAPER SIZE STANDARD UNI 9175

DP03RF-CA01-M1901-RD001 D304 DP03RF074601 COP12769-1

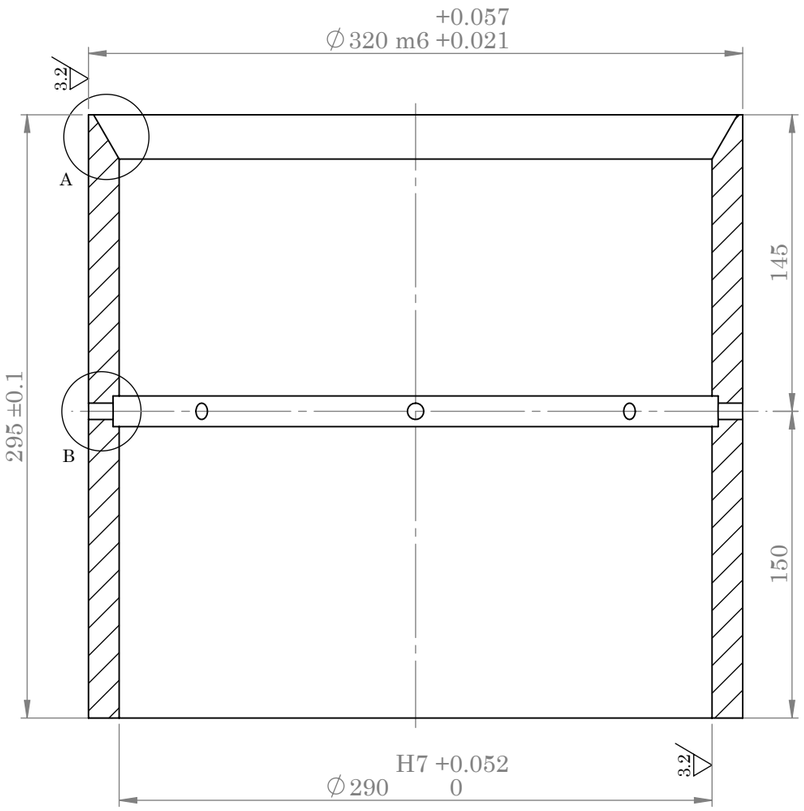

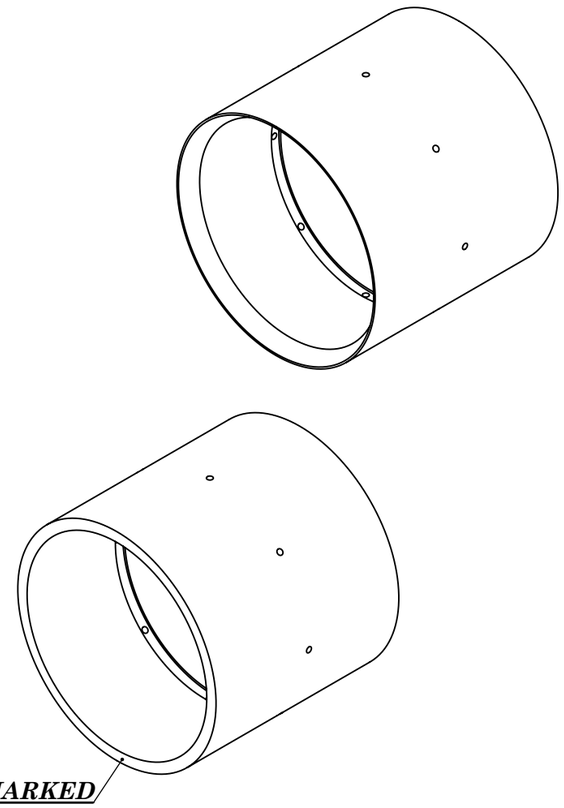

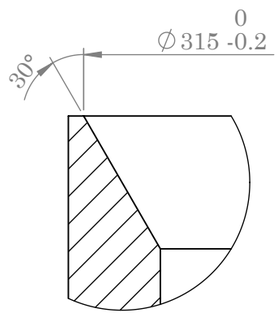

DETAIL A
SCALE 1 : 1

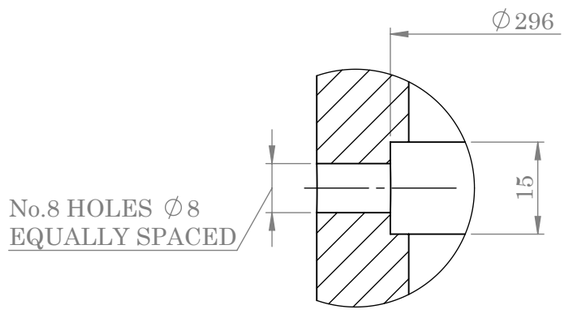

DETAIL B
SCALE 1 : 1

6.3 3.2
( )

POS	QTY	DESCRIPTION	MATERIAL	UNIT MASS (kg)	TOTAL MASS (kg)	DANIELI CODE	ASSY . CODE
304	01	D:320,d:290,L:295	CK 45	33	33	4.262869.M	-

NOTE:
Dimension without tolerance follow:
ISO 2768-M
Material:
CK 45 DIN 17200

	NAME	DATE
DES.		
DRA.	M.H.Fesahat	92/02/20
CHK.	A.Alamdar	92/02/21
APPR.	M.Minjalili	92/02/22

TITLE:
PLANT UNIT 03
BUSH

IRAN ALLOY STEEL CO

ORDER.	RF6/4.C2	REF.DRAW	***SD1103T2901200304*** REV
CODE No.	4.262869.M	DWG No.	***FD1103T2901200304*** 00
QCTM No.	BF50230.2	SCALE: 1 : 3	SIZE: A3 SHEET: 1 OF 1

NOTE:
Mat. Comparison:
C 40 TD3 UNI 7845
CK45 DIN17200
ASTM A235 Grade E

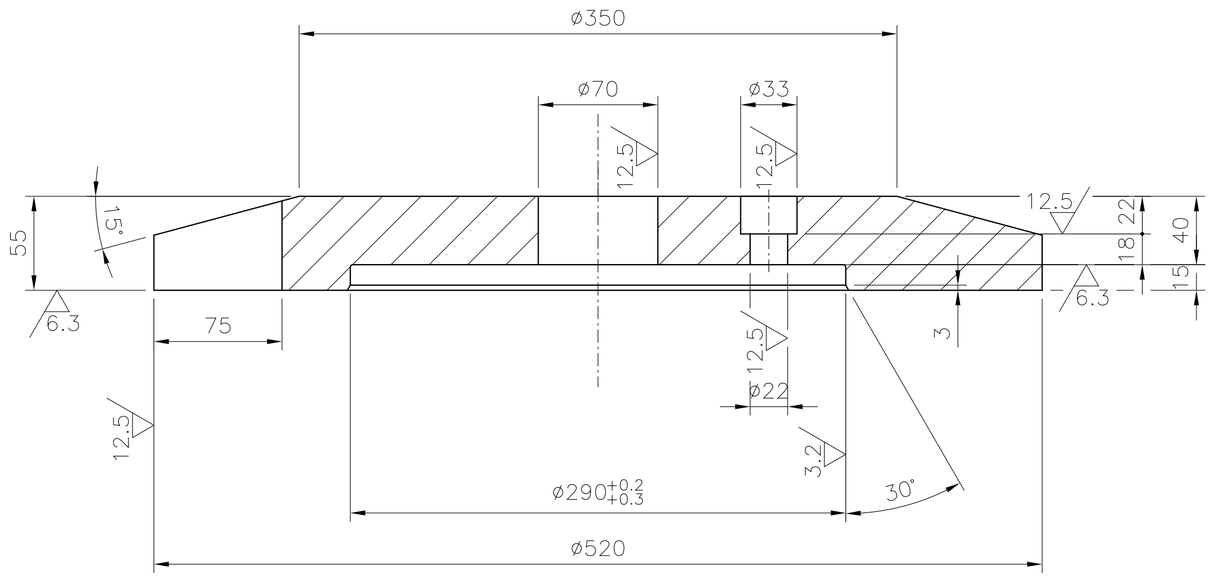

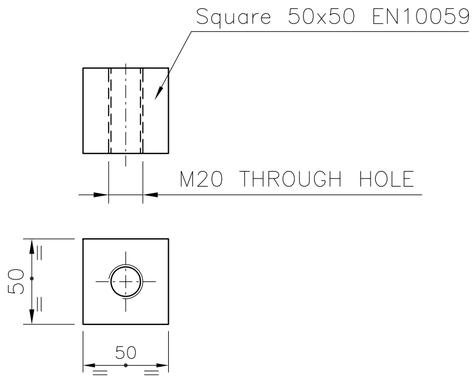

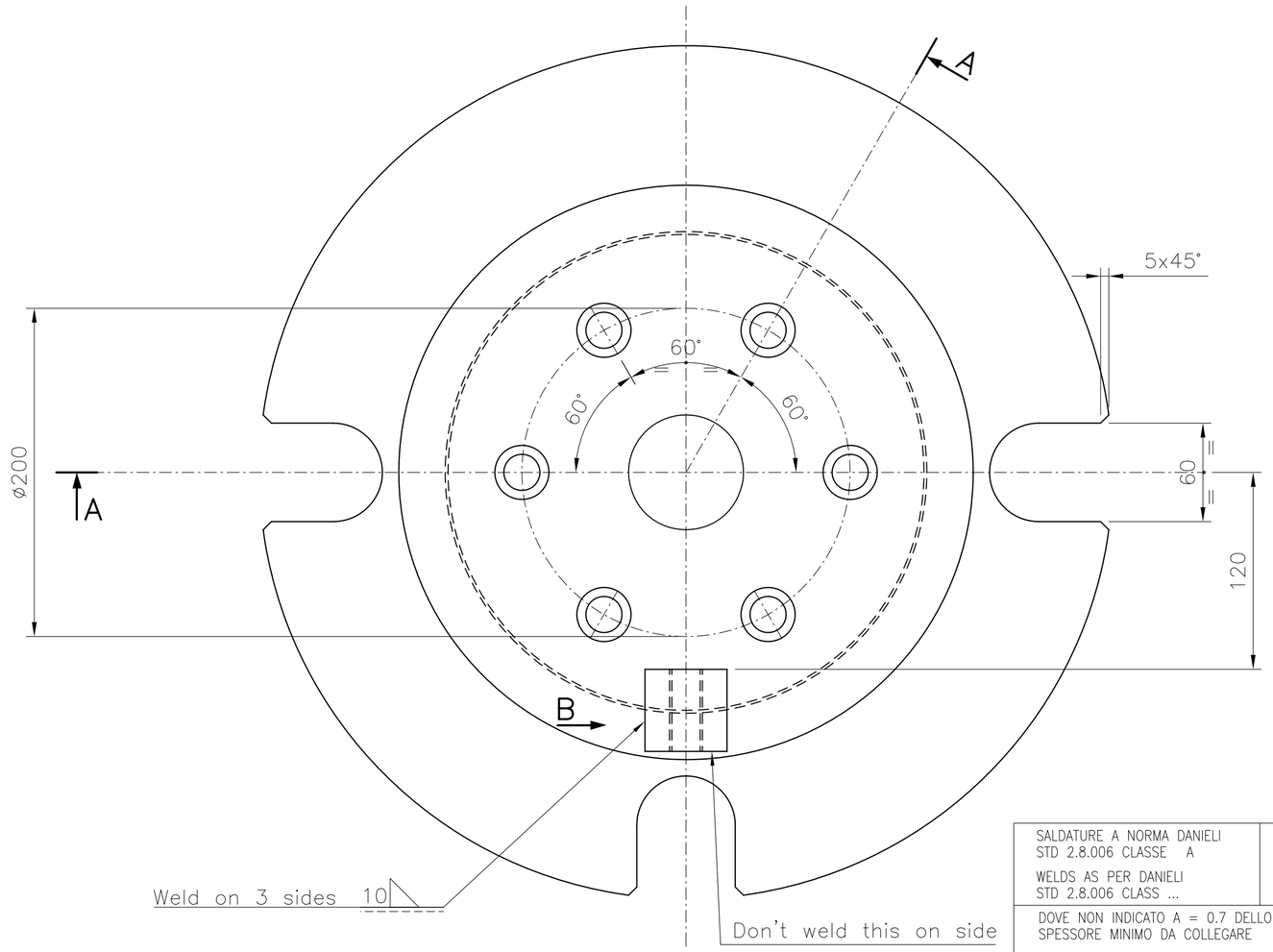

Rev.	Date	Revisions description	Drawn by	Checked by	Approved by
00	16 Mar 2011	EMESSO PER COSTRUZIONE ISSUED FOR CONSTRUCTION	Basiricò M	Basiricò M	

SALDATURE A NORMA DANIELI STD 2.8.006 CLASSE A

WELDS AS PER DANIELI STD 2.8.006 CLASS ...

DOVE NON INDICATO A = 0.7 DELLO SPESSORE MINIMO DA COLLEGARE

WHERE NOT INDICATED A = 0.7 OF MINIMUM THICKNESS TO BE WELDED

A A/2

Material 1 (where not indicated on drawing): S275JR EN 10025 — State of supply Mat.1 — Danieli Supply Std. — Supply Class — Pattern DB

Material 2 — State of supply Mat.2 — Danieli Supply Std. — Supply Class — Casting Code

Material 3 — State of supply Mat.3 — Danieli Supply Std. — Supply Class

Heat Treatment

On Drawing Symbol, if required, ———

Coating

On Drawing Symbol, if required, ———

Unquoted radius	Unquoted bevels	Dimensions without tolerance as per	Machinings	Max. Welding Class
1 (mm)	1X45° (mm)	DANIELI STD 2.4.103	12.5 / 12.5 / 6.3 / 3.2	A

Project Name

DANIELI CENTRO MET

Job nr

Obtained from

Replaces

Family code/Machine code: 41561

Weight (Kg): 70

J (Kgm²)

Title: FLANGE

Scale: 1:2.5

DANIELI Shop number: 5.541749.M

Revision: 00

Format: A2

Nr. of sheets: 001

DANIELI dwg number

Revision

Sheet: 001 Follow

According to law DANIELI & C. SpA considers this document to be a company secret and therefore prohibits any person to reproduce or disclose it or make it known in whole or in part to other parties or to competitors without specific written authorization of DANIELI's Management

File nr 5541749M_001

COMPUTER AIDED DESIGN –A

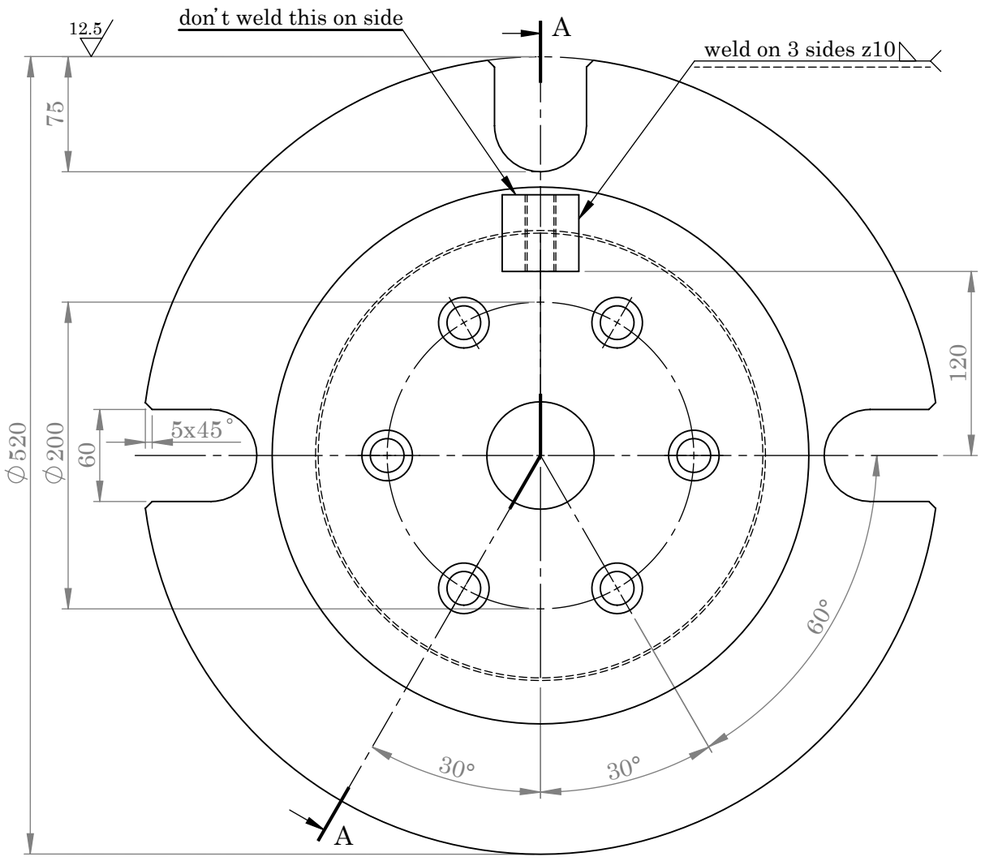

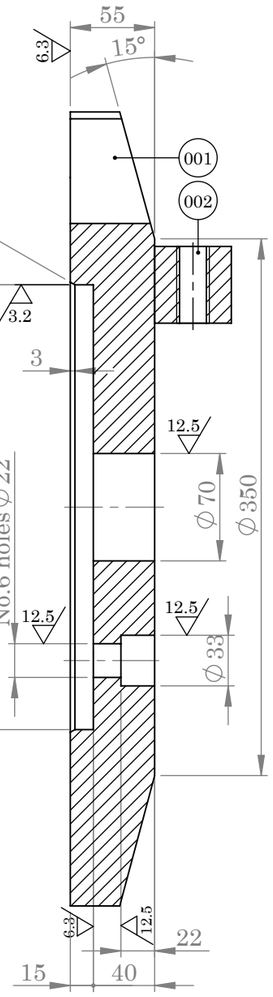

SECTION A-A
SCALE 1 : 4

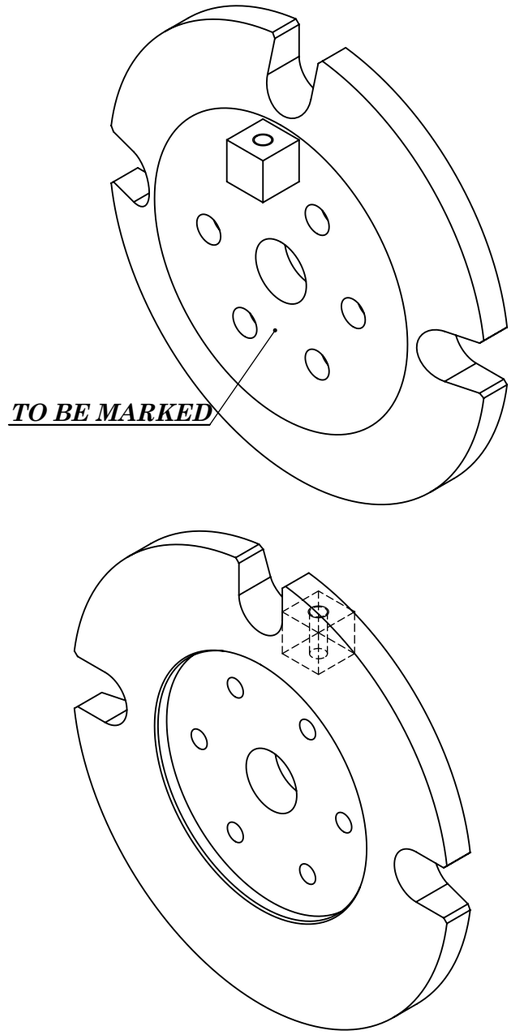

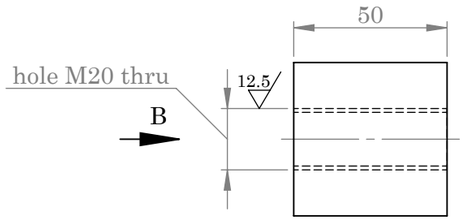

PIECE No. 002
SCALE 1 : 2

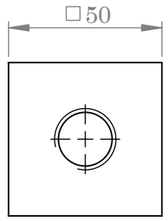

VIEW B
SCALE 1 : 2

12.5 (12.5 , 6.3 , 3.2)

POS	QTY	DESCRIPTION	MATERIAL	UNIT MASS (kg)	TOTAL MASS (kg)	DANIELI CODE	ASSY . CODE
002	01	SQUARE 50x50,L:50	ST 44-2	1	1	-	-
001	01	D:520,d:70,T:55	ST 44-2	66.5	66.5	-	-
305	01	ASSEMBLY	-	67.5	67.5	-	-

NOTE:
Dimension without tolerance follow:
ISO 2768-M
Material:
ST 44-2 DIN 17100

	NAME	DATE
DES.		
DRA.	M.H.Fesahat	92/03/03
CHK.	A.Alamdar	92/03/04
APPR.	M.Minjalidi	92/03/04

TITLE:
PLANT UNIT 03
FLANGE

IRAN ALLOY STEEL CO

ORDER.	RF6/7.B2	REF.DRAW	***SD1203M2901001305***	REV
CODE No.	3040110067	DWG No.	***FD1203M2901001305***	00
QCTM No.	BF50233.2	SCALE: 1 : 4	SIZE: A3	SHEET: 1 OF 1

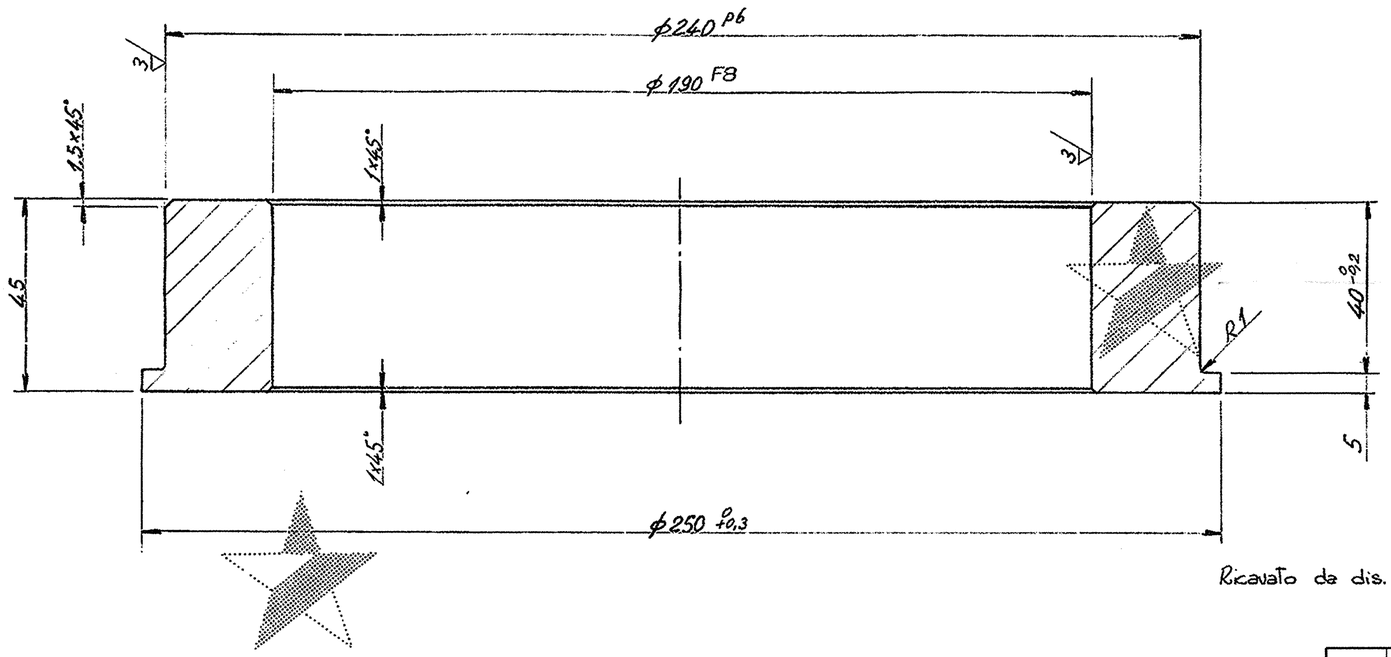

Ricavato da dis. 4.245863.E

REV.	FILE	DATE DATA	DESCRIPTION DESCRIZIONE	Drawn Disegnato	Checked Control.	Approved Approvata	Issue Vista
1	C M C M C M C M	06/94	ISSUED FOR INFORMATION	SOOORMAN	DE CORTI	STUCCHI	

REVISIONI–REVISIONS

MINISTRY OF MINES AND METALS

NISCO

ALLOY STEEL PROJECT

YAZD - IRAN

ورود به دفتر اسناد فنی
شماره: ۱۸۵/۴/۱۲
تاریخ: ۷۹/۶/۲۰

APPROVED:

مرکز اسناد فنی
کنترل شد
تاریخ: ۷۹/۶/۲۰
شرکت فولاد آلیاژی ایران

DVAI/BÖHLER
CONSULTANT ENGINEER

APPROVED: A102RQ23/15

DANIELI CONSORTIUM MITSUBISHI CORPORATION

CODE – CODICE	CLASSIFICATION – CLASSIFICAZIONE	Obtained from – Ricav. da	Replace – Sostituisce
4.262871.F			

DRAWING – DISEGNO

Rev. 1

TITLE – TITOLO:
PLANT UNIT 03
BUSH

Scale – Scala 1:1

Mass – Massa 6

Size – Form. A2

Sheet Foglio 1

Follow Segue /

DRAWING – DISEGNO SD1103T2901200306

Rev. 1

Item–Pos.	Unit – Gruppo
306	SD1103T2901200

Material – Materiale
2C40 EN10083

Header treatment – Tratt. termica

MODELLO–PATTERN | J=m.r²(Kg m²)

Comparazione mat.
Mat. comparison

C 40 TD3 UNI 7845
CK 45 DIN 17200
ASTM A235 Grade E

6 [3]
CHAMFERED WITHOUT DIMENSIONED
RADIUS WITHOUT DIMENSIONED
GENERALE MACHINING TOLLERANCES DEVIATIONS FOR DIMENSIONS WITHOUT TOLLERANCE TO SPECIFIED UNI 5307-63

COMPUTER AIDED DESIGN

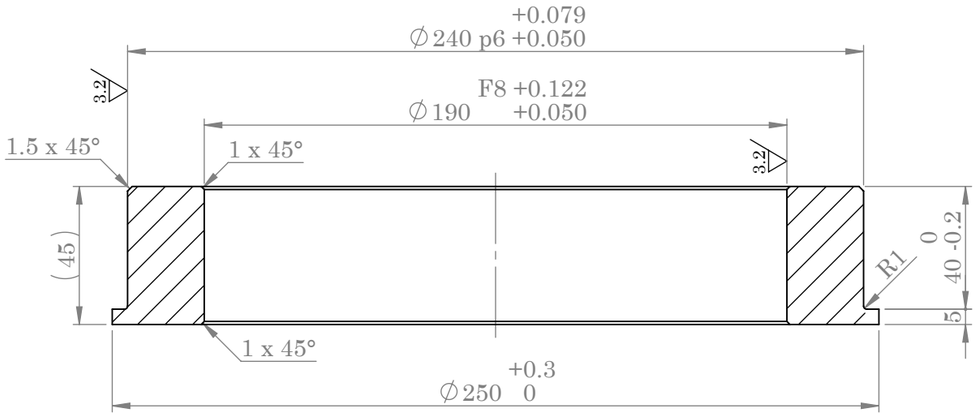

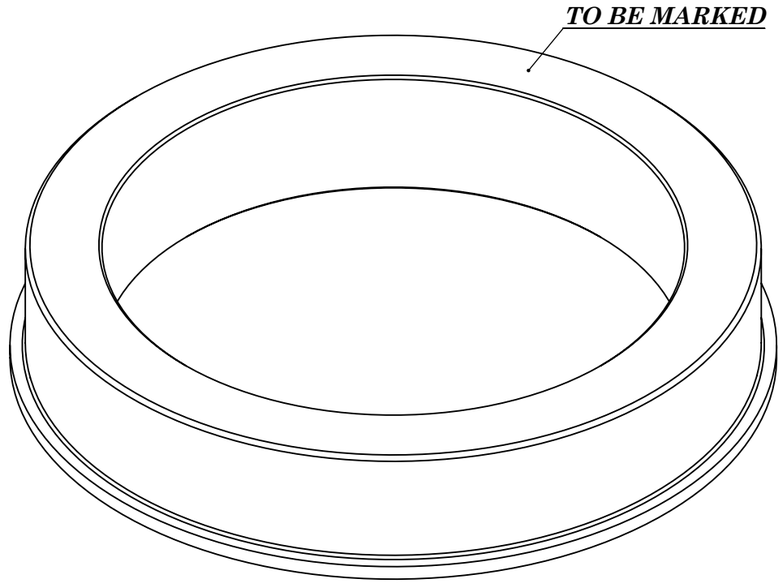

6.3 (3.2)

POS	QTY	DESCRIPTION	MATERIAL	MASS (kg) UNIT	MASS (kg) TOTAL	DANIELI CODE	ASSY . CODE
306	01	D:250,d:190,L:45	CK 45	6	6	4.262871.F	-

NOTE:
Dimension without tolerance follow:
ISO 2768-M
Material:
CK 45 DIN 17200

	NAME	DATE
DES.		
DRA.	F.Askari shahi	92/02/20
CHK.	A.Alamdar	92/02/21
APPR.	M.Minjalidi	92/02/22

TITLE:
PLANT UNIT 03
BUSH

IRAN ALLOY STEEL CO

ORDER.	RF6/4.C3	REF.DRAW	***SD1103T2901200306***	REV
CODE No.	4.262871.F	DWG No.	***FD1103T2901200306***	00
QCTM No.	BF50230.3	SCALE: 1 : 2	SIZE: A3	SHEET: 1 OF 1

NOTE:
Mat. Comparison:
C 40 TD3 UNI 7845
CK45 DIN 17200
ASTM A235 Grade E

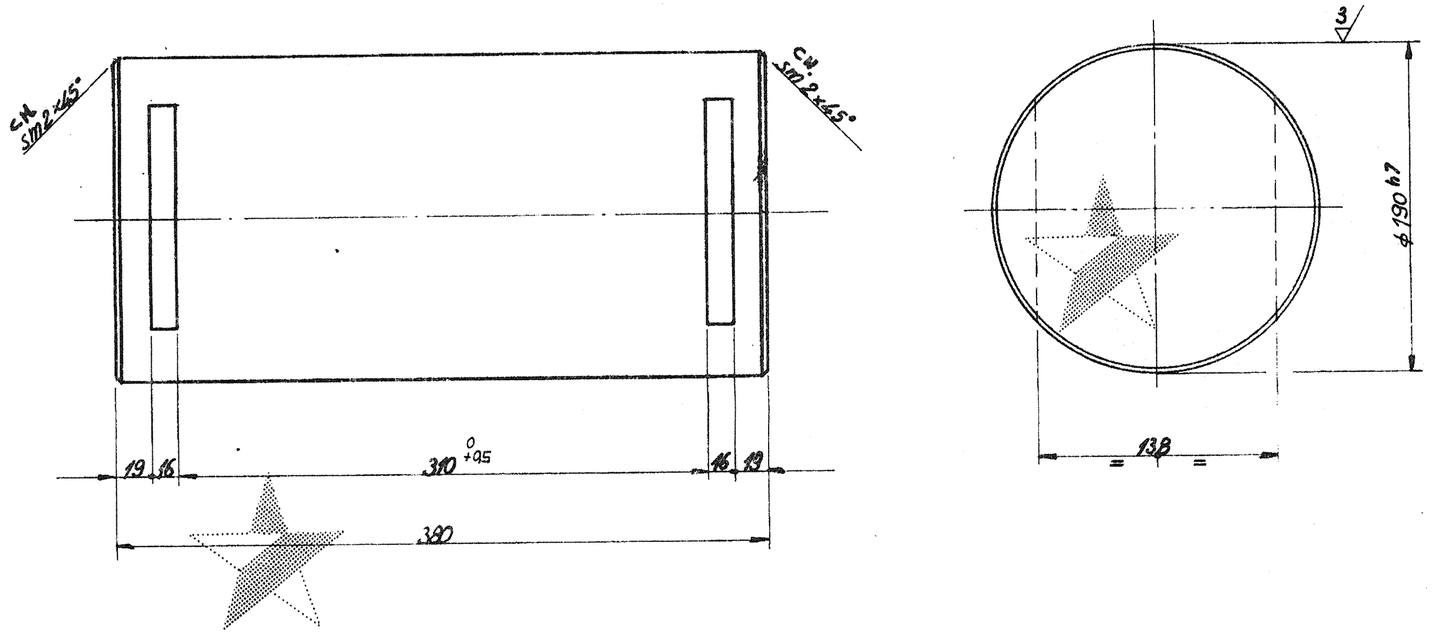

DANIELI
14.09.94 900039
UFFICIO TECNICO

Comparazione mat.
Mat. comparison

C 40 TD3 UNI 7845
CK 45 DIN 17200
ASTM A235 Grade E

CHAMFERED WITHOUT DIMENSIONED
RADIUS WITHOUT DIMENSIONED

GENERALE MACHINING TOLLERANCES DEVIATIONS FOR DIMENSIONS WITHOUT TOLLERANCE TO SPECIFIED UNI 5307-63

REV.	FILE	DATE DATA	DESCRIPTION DESCRIZIONE	Drawn Disegnato	Checked Control.	Approved Approvato	Issue Visto
C							
M							
C							
M							
C							
M							
1	C						
	M	11/02/93	ISSUED FOR INFORMATION	DEANA	DECORTI	CATT.	

REVISION - REVISIONI

MINISTRY OF MINES AND METALS

NISCO

ALLOY STEEL PROJECT

YAZD - IRAN

APPROVED:

DVAI/BÖHLER
CONSULTANT ENGINEER

APPROVED: A102RA23/16

DANIELI CONSORTIUM MITSUBISHI CORPORATION

Item-Pos.	Unit-Gruppo
307	SD1103T2901200

Material-Materiale

CK45 DIN 17200
C 40
UNI 7845/7231

Header treatment - Tratt. termico

Pattern - Modello | J=m.r²(Kg m²)

CODE - CODICE	CLASSIFICATION - CLASSIFICAZIONE	Obtained from - Ricav. da	Replace - Sostituisce
4.262872.G			

DRAWING - DISEGNO

Rev.

TITLE - TITOLO:
PLANT UNIT 03

PIN

Scale - Scala: 1:2

Mass - Massa: 84

Size - Form.: A 2

Sheet Foglio: 1

Follow Segue: /

DRAWING - DISEGNO: SD1103T2901200307

1

FORMATO - A2 - 420x594

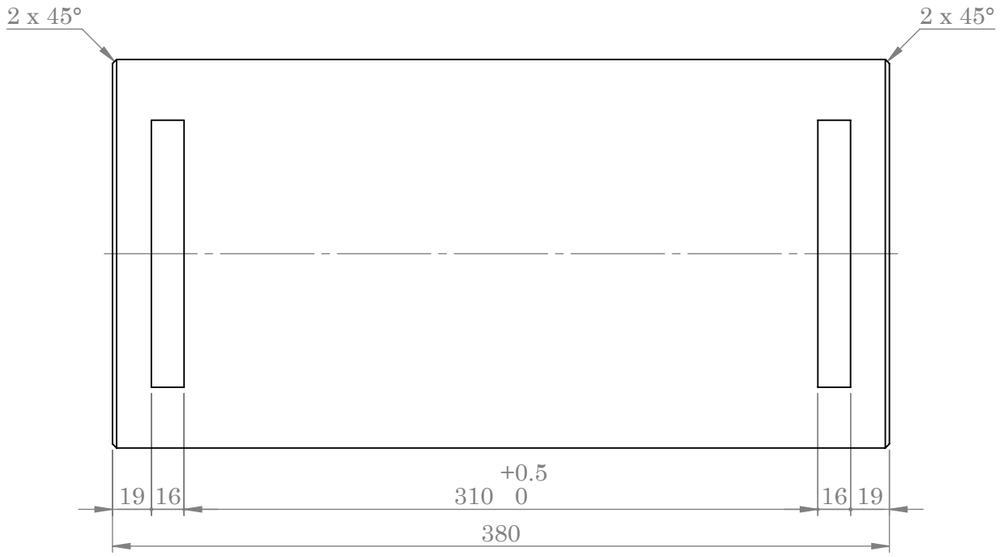

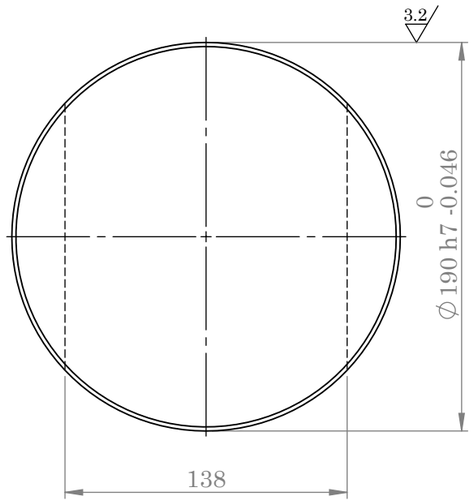

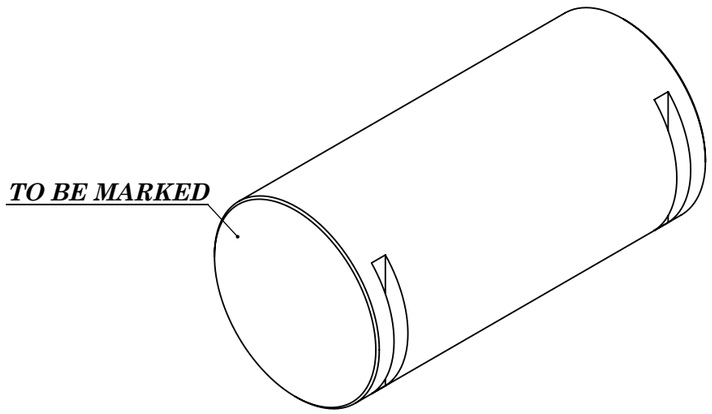

NOTE:
Mat. Comparison:
C 40 TD3 UNI 7845
CK45 DIN 17200
ASTM A235 Grade E

6.3 (3.2)

POS	QTY	DESCRIPTION	MATERIAL	MASS (kg) UNIT	MASS (kg) TOTAL	DANIELI CODE	ASSY . CODE
307	01	∅190x380	CK 45	84	84	4.262872.G	-

NOTE:
Dimension without tolerance follow:
ISO 2768-M
Material:
CK45 DIN 17200

	NAME	DATE
DES.		
DRA.	M.H. Fesahat	92/02/25
CHK.	A.Alamdar	92/02/26
APPR.	M.Minjalili	92/02/27

TITLE:
PLANT UNIT 03
PIN

Afrab Pashoh Gas Prod.

IRAN ALLOY STEEL CO

ORDER.	RF6/4.C4	REF.DRAW	***SD1103T2901200307***	REV
CODE No.	4.262872.G	DWG No.	***FD1103T2901200307***	00
QCTM No.	BF50230.4	SCALE: 1 : 3	SIZE: A3	SHEET: 1 OF 1

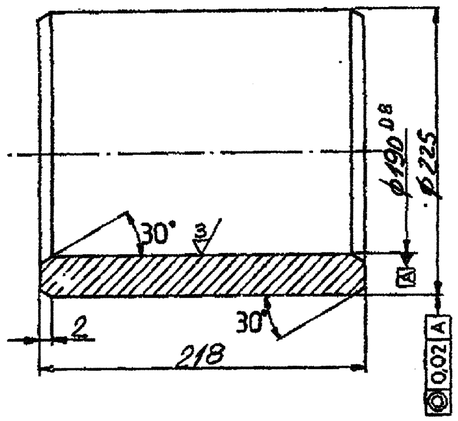

Nota: ricavare da tubo ø 244,5 sp.30 UNI 4991
Note: obtain by pipe th.

Simile a ds. 4.262767.P 12 [3]

TOLLERANZE GENERALI DI LAVORAZIONE
Scostamenti per quote senza tolleranze
secondo norma N. 2.4.103

GENERAL MACHINING TOLERANCES
Deviations for dimensions without
tolerance to spec. N. 2.4.103

REV.	FILE	DATE DATA	DESCRIPTION DESCRIZIONE	Drawn Disegnato	Checked Control.	Approved Approvato	Issue Visto
1	C M	06/94	ISSUED FOR INFORMATION	SOODRMAN	DE CORTI	STUCCHI	

REVISIONI–REVISIONS

MINISTRY OF MINES AND METALS

NISCO

ورود به دفتر اسناد فنی
شماره: ۱۸۵/۴/۱۲
تاریخ: ۷۹/۶/۲۰

APPROVED:
مرکز اسناد فنی
کنترل شد
تاریخ: ۷۹/۶/۲۰
شرکت فولاد آلیاژی ایران

ALLOY STEEL PROJECT

YAZD - IRAN

DVAI/BÖHLER
CONSULTANT ENGINEER

APPROVED: A102Ra23/17

DANIELI CONSORTIUM MITSUBISHI CORPORATION

308	SD1103T2901200
Item–Pos.	Unit – Gruppo

Material – Materiale: ST 52.0 DIN 1629

Header treatment – Tratt. termico

MODELLO–PATTERN | J=m.r²(Kg m²)

CODE – CODICE: 4.262873.A
CLASSIFICATION – CLASSIFICAZIONE
Obtained from – Ricav. da
Replace – Sostituisce

DRAWING – DISEGNO

Rev. 1

TITLE – TITOLO:
PLANT UNIT 03
BUSH

Scale – Scala: /
Mass – Massa: 19
Size – Form.: A2
Sheet Foglio: 1
Follow Segue: /

DRAWING – DISEGNO: SD1103T2901200308

Rev. 1

COMPUTER AIDED DESIGN

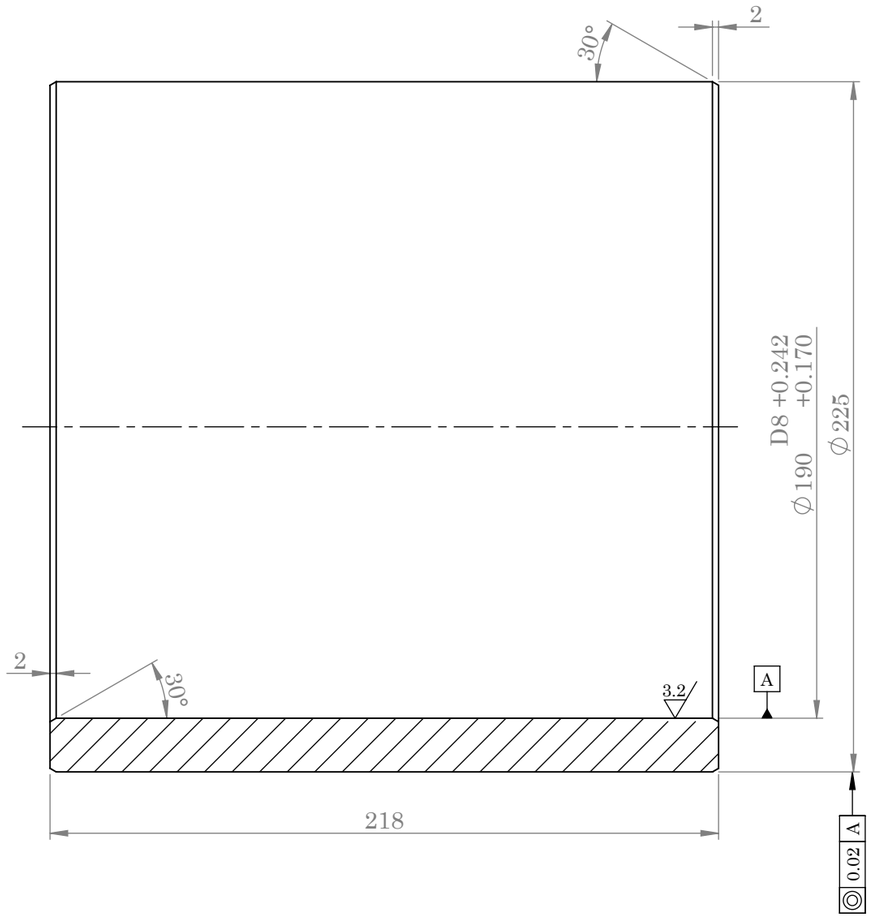

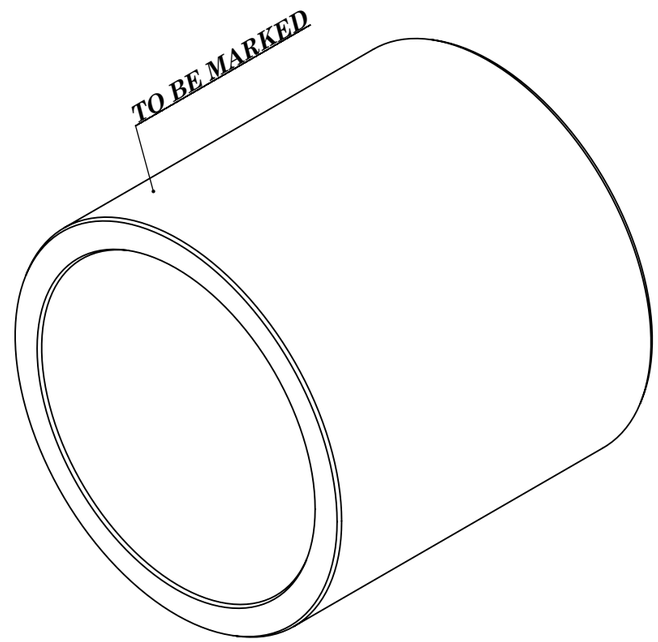

12.5 (3.2)

308	01	∅225x218	ST 52.0	19	19	4.262873.A	-
POS	QTY	DESCRIPTION	MATERIAL	UNIT MASS (kg)	TOTAL MASS (kg)	DANIELI CODE	ASSY . CODE

NOTE:
Dimension without tolerance follow:
ISO 2768-M
Material:
ST 52.0 DIN 1629

	NAME	DATE
DES.		
DRA.	M.H.Fesahat	92/02/21
CHK.	A.Alamdar	92/02/22
APPR.	M.Minjalili	92/02/23

TITLE:

PLANT UNIT 03
BUSH

IRAN ALLOY STEEL CO

ORDER.	RF6/4.C5	REF.DRAW	***SD1103T2901200308***	REV
CODE No.	4.262873.A	DWG No.	***FD1103T2901200308***	00
QCTM No.	BF50230.5	SCALE: 1 : 2	SIZE: A3	SHEET: 1 OF 1

NOTE:
obtain by pipe ∅244.5x30

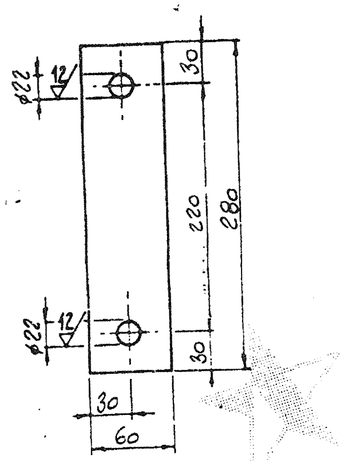

Spessore 15
Thickness

NO OFF	ITEM	DESCRIPTION	MATL	REMARKS	CAT NO
		LOCATION / JOB			
		BHP Steel — ROD AND BAR PRODUCTS DIVISION			
	REF LIST	DRN	CHKD	SCALE	
	REF DRG				
	DE	SDE	CDE		
	DATE				

DANIELI
14.09.94 900061
UFFICIO TECNICO

REV.	FILE	DATE DATA	DESCRIPTION DESCRIZIONE	Drawn Disegnato	Checked Control.	Approved Approvato	Issue Visto
	C						
	M						
	C						
	M						
	C						
	M						
	C						
1	M	11/03/93	ISSUED FOR INFORMATION	DEANA	DECORTI	CATT.	

REVISION - REVISIONI

MINISTRY OF MINES AND METALS

NISCO

ALLOY STEEL PROJECT

YAZD - IRAN

APPROVED:

DVAI/BÖHLER
CONSULTANT ENGINEER

APPROVED: A102RA23/18

DANIELI — CONSORTIUM — MITSUBISHI CORPORATION

CODE - CODICE	CLASSIFICATION - CLASSIFICAZIONE	Obtained from - Ricav. da	Replace - Sostituisce
4.200351.R			

DRAWING - DISEGNO

TITLE - TITOLO:
PLANT UNIT 03
BASE PLATE

Scale - Scala

Mass - Massa: 1,70

Size - Form.: A 2

Sheet Foglio: 1

Follow Segue: /

Rev.: 1

DRAWING - DISEGNO: SD1103T2901200309

Item-Pos.	Unit-Gruppo
309	SD1103T2901200

Material-Materiale

ST44-2 DIN 17100
FE 430 B (FE420B-A FE410B) (EU 25)
UNI 7070/5335/4

Header treatment - Tratt. termico

Pattern - Modello | J=m.r²(Kg m²)

FORMATO - A2 - 420 x 594

THICKNESS : 15

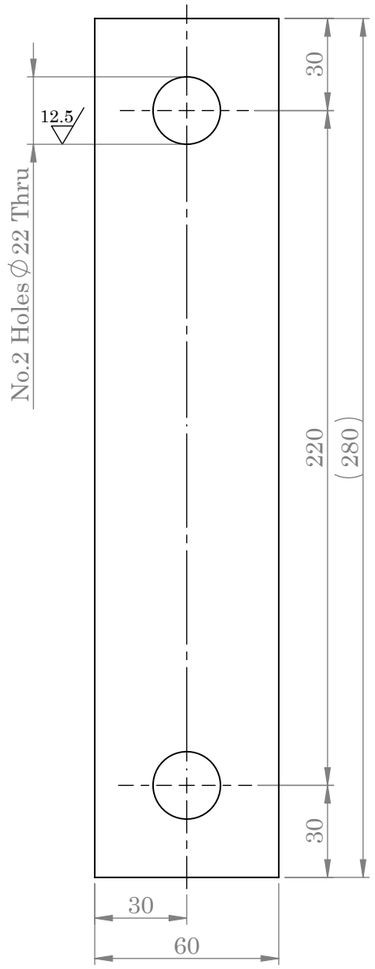

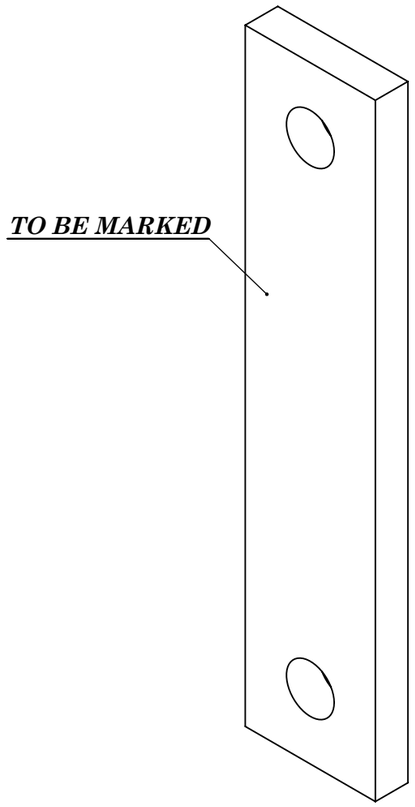

12.5 ( )

POS	QTY	DESCRIPTION	MATERIAL	MASS (kg) UNIT	MASS (kg) TOTAL	DANIELI CODE	ASSY . CODE
309	01	PL 280x60	ST44-2	1.7	1.7	4.200351.R	-

NOTE:
Dimension without tolerance follow:
ISO 2768-M
Material:
ST44-2 DIN 17100

	NAME	DATE
DES.		
DRA.	M.H. Fesahat	92/02/21
CHK.	A.Alamdar	92/02/22
APPR.	M.Minjalili	92/02/23

TITLE:

PLANT UNIT 03
BASE PLATE

Afkab Tarahan Co. (Pvt.)

IRAN ALLOY STEEL CO

ORDER.	RF6/4.C6	REF.DRAW	***SD1103T2901200309***	REV
CODE No.	4.200351.R	DWG No.	***FD1103T2901200309***	00
QCTM No.	BF50230.6	SCALE: 1 : 2	SIZE: A3	SHEET: 1 OF 1

BACK

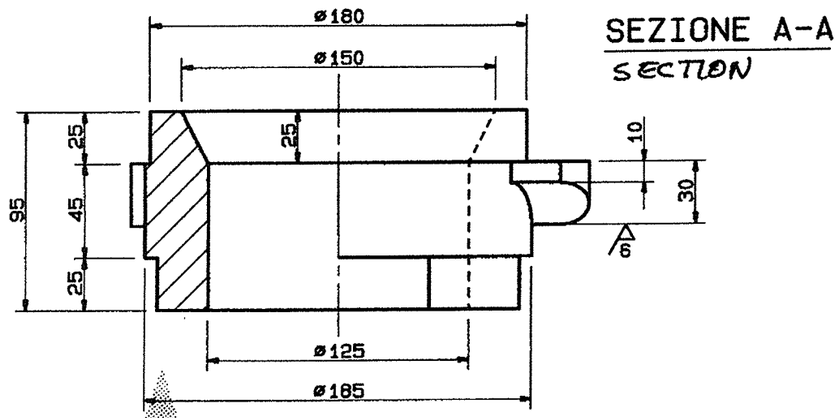

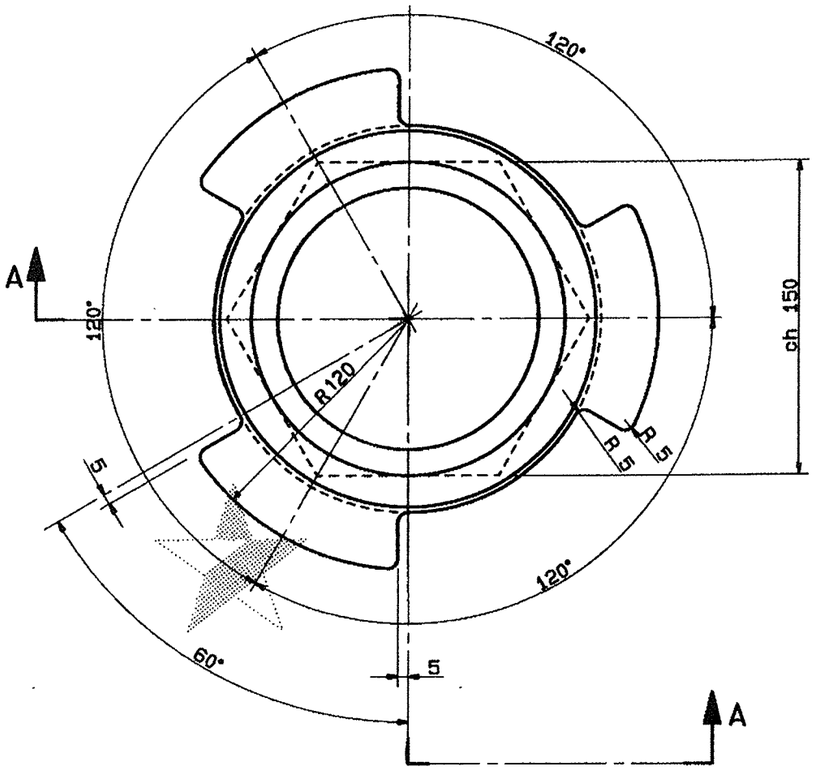

B105 LC.1/256

مرکز استاندارد فنی
کنترل شد
تاریخ :
شرکت فولاد آلیاژی ایران

920961.01.21 A0995

D&C 5992 31/03/1999

12/ [6/ ✓ ✓ ✓ ✓]	CHAMFERED WITHOUT DIMENSIONED RADIUS WITHOUT DIMENSIONED

GENERALE MACHINING TOLLERANCES DEVIATIONS FOR DIMENSIONS WITHOUT TOLLERANCE TO SPECIFIED UNI 5307-63

GRUPPO - UNIT	POS. - ITEM	GRUPPO - UNIT	POS. - ITEM	GRUPPO - UNIT	POS. - ITEM
				8.031692.R	318
				8.031691.T	317

RIFERIMENTI - REFERENCES

COMMESSA N. - JOB N.	PEZZI N. N. OF PARTS	N. PROGRESSIVO PROGRESSIVE N.

MATERIALE - MATERIAL	MODELLO N. - PATTERN N.	TRATTAMENTI TERMICI - HEAT TREATMENTS
Fe 410 2KU UNI 5869	DB	

DANIELI

SCALA SCALE	MASSA (Kg) MASS	J = M x R² (Kg x m²)	CLASSIFICAZIONE CLASSIFICATION	FORM. SIZE
1:2	~ 16		GG12	A2

A termini di legge ci riserviamo la proprietà di questo disegno con divieto di riprodurlo o di renderlo comunque noto a terzi o a ditte concorrenti senza nostra autorizzazione.

All rights reserved including the right to reproduce or to disclose to third parties this drawing or position there off without Danieli's written authoorisation.

OGG. - RE.:

TITOLO - TITLE: SUPPORTO
SUPPORT

Disegn. Drw.	Progett. Design.	Contr. Contr.
LGM	MAUR	ZUO
Data Date	Data Date	Data Date
7-97		

4200578.Z

MF	IM	DESCRIZIONE MODIFICHE MODIF. DESCRIPTION	FIRMA SIGN.	DATA DATE
		PATTERN 22 MAG. 1998		
	02	AGGIORNATO MATERIALE	Ulgel	6.6.98
		CASTER 9 APR. 1998	652701	

BACK

REV.	DATE	DESCRIPTION	DRN

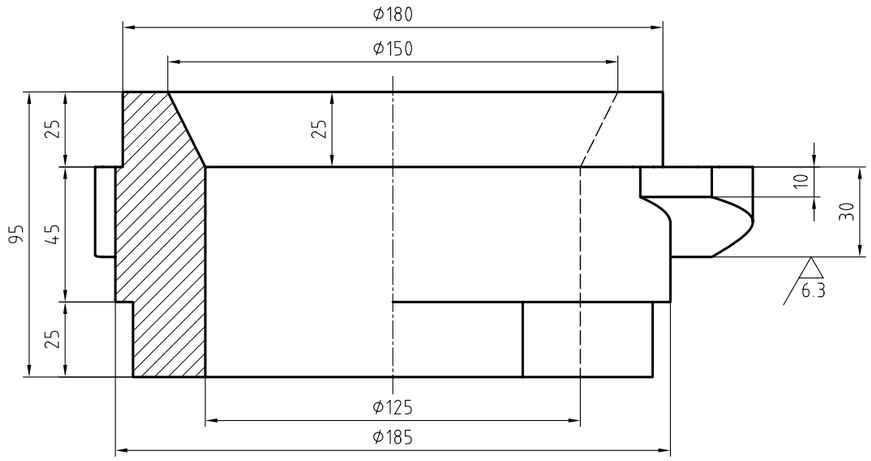

SECTION"A-A"

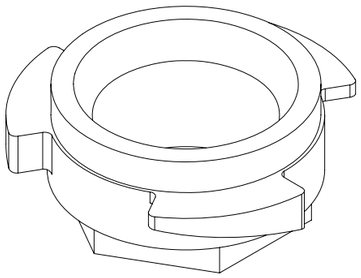

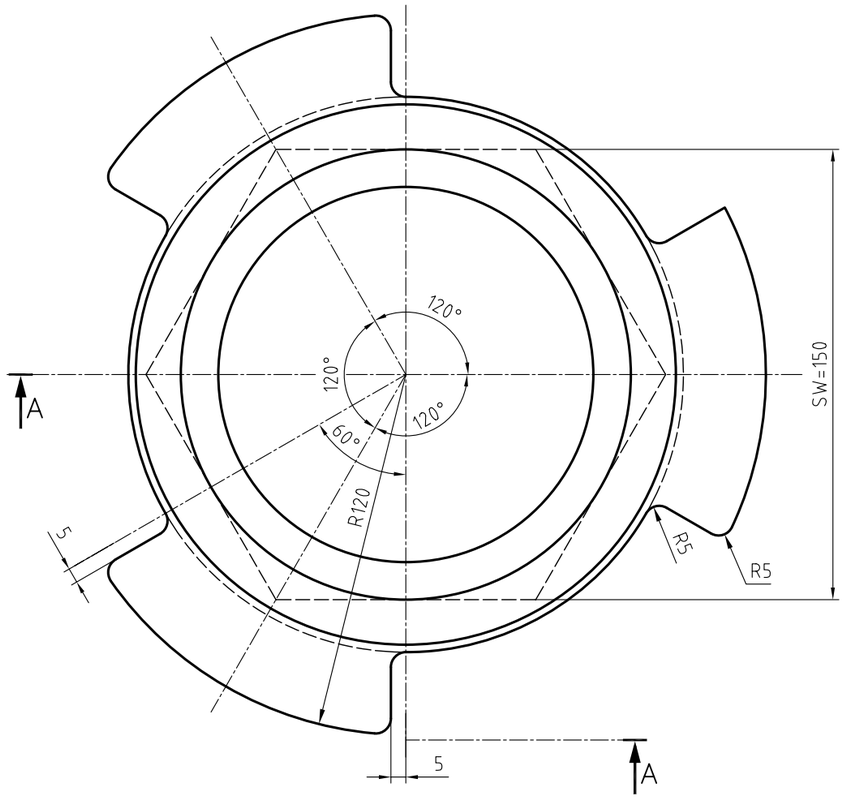

12.5 (6.3)

POS.	QTY.	DESCRIPTION	MATERIAL	UNIT MASS	TOTAL MASS	REFERENCE
1	1	SUPPORT	P265GH(EN10028-2)	10 Kg	10 Kg	

NOTE: DIMENSION WITHOUT TOLERANCE ACC.TO DIN ISO 2768 mk

ISO 128

	DATE	NAME
DRN.	90/03/11	M.A
CHE.		
APPR.		

SIZE: A3

SCALE: 1:2

ADIB TARH ARYAN

TITLE: SUPPORT(4.200578.Z)

IRAN ALLOY STEEL CO.

CODE ASSY:	ORDER	REFRENCE DRAWING NO:	SHEET
	RA33/6	SD1103T2901200310	1 OF 1
CODE NO: 4.200578.Z	QCTM NO.	DRAWING NO:	REV.
	BA20132	AD1103T2901200310	0

Dimen.	Fit

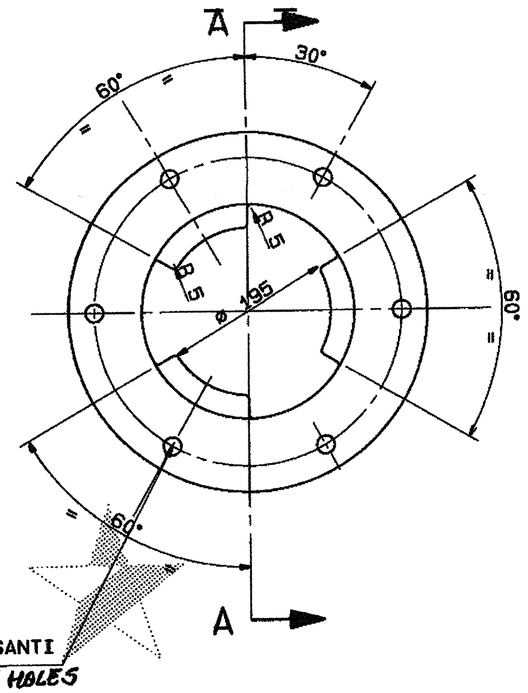

N° 6 FORI ø21
EQUIDISTANTI-PASSANTI
THRU EQUIDISTANT HOLES

SEZIONE A-A
SECTION

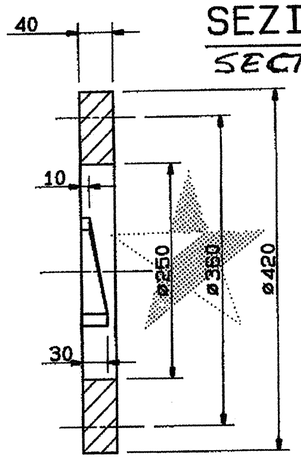

REV.	FILE	DATE DATA	DESCRIPTION DESCRIZIONE	Drawn Disegnato	Checked Control.	Approved Approvata	Issue Vista
1	C M C M C M C M	06/94	ISSUED FOR INFORMATION	SODORMAN	DE CORTI	STUCCHI	

REVISIONI–REVISIONS

MINISTRY OF MINES AND METALS

NISCO

ALLOY STEEL PROJECT

YAZD - IRAN

APPROVED:

DVAI/BÖHLER
CONSULTANT ENGINEER

APPROVED: A102Ra23/19

DANIELI CONSORTIUM MITSUBISHI CORPORATION

Item–Pos.	Unit – Gruppo
311	SD1103T2901200

Material – Materiale: Fe 410 2kw UNI 5869

Header treatment – Tratt. termico

MODELLO–PATTERN | J=m.r²(Kg m²)

CHAMFERED WITHOUT DIMENSIONED
RADIUS WITHOUT DIMENSIONED

GENERALE MACHINING TOLLERANCES DEVIATIONS FOR DIMENSIONS WITHOUT TOLLERANCE TO SPECIFIED UNI 5307-63

CODE – CODICE: 4.200579.S
CLASSIFICATION – CLASSIFICAZIONE
Obtained from – Ricav. da
Replace – Sostituisce

DRAWING – DISEGNO

Rev. 1

TITLE – TITOLO:
PLANT UNIT 03
FLANGE

Scale – Scala: 1:5
Mass – Massa: 34
Size – Form.: A2
Sheet Foglio: 1
Follow Segue: /

DRAWING – DISEGNO: SD1103T2901200311

Rev. 1

COMPUTER AIDED DESIGN

HOECHST ITALIA

مرکز اسناد فنی
کنترل شد
تاریخ: ۷۹/۶/۲۰
شرکت فولاد آلیاژی ایران
ورود به دفتر اسناد فنی
شماره: ۱۸۵/F/۱۲
تاریخ: ۷۹/۶/۲۰

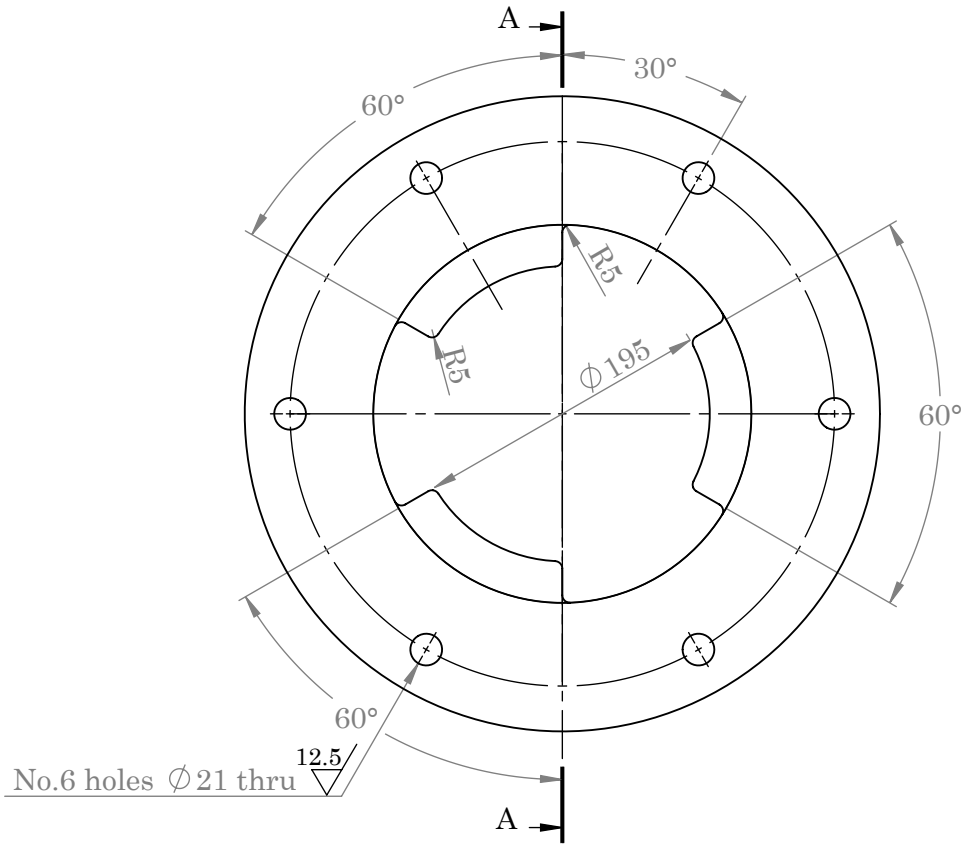

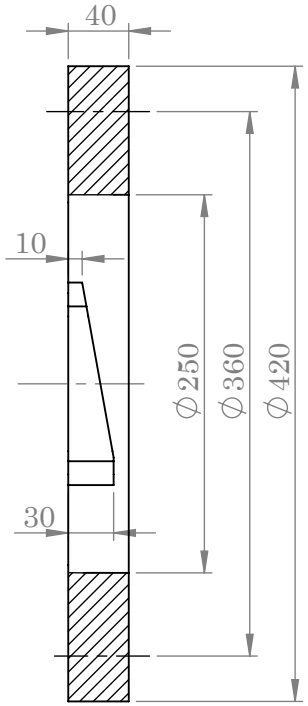

SECTION A-A

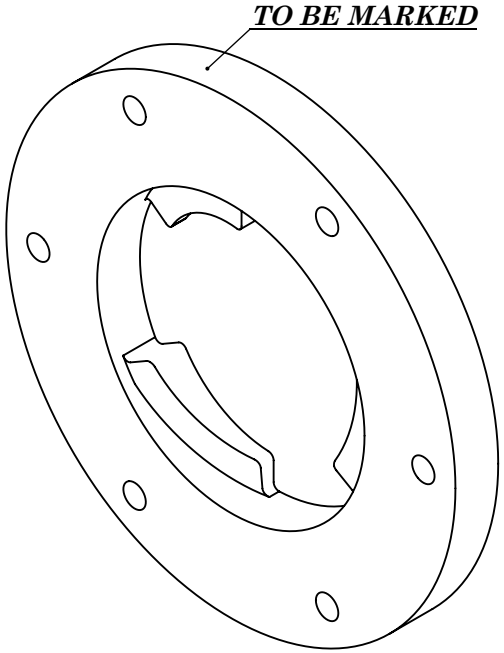

12.5 (12.5)

POS	QTY	DESCRIIPTION	MATERIAL	MASS UNIT	MASS TOTAL	DANIELI CODE	ASSY . CODE
311	1	∅420x40	ST 44-2	34kg	34kg	4.200579.S	-

NOTE

Dimension without tolerance follow: ISO 2768-M

	NAME	DATE
DES		
DRA	A.ALAMDAR	90/7/30
CHK.	M.MIRJLILI	90/8/03
APPR	M.FARROKHI	90/8/10

TITLE:

PLANT UNIT 03 FELANGE

ATYCO

IRAN ALLOY STEEL CO

ORDER	RI24/1	REF.DRAW	SD1103T2901200311	REV
CODE NO.	4.200579.S	DWG NO.	ID1103T2901200311	00
QCTM NO.	BI30087	SCALE: 1:5	SIZE: A4	SHEET: 1 OF 1

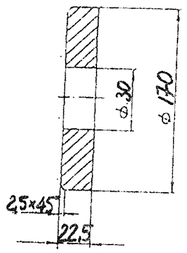

12

DANIELI
14.09.94 900044
UFFICIO TECNICO

REV.	FILE	DATE DATA	DESCRIPTION DESCRIZIONE	Drawn Disegnato	Checked Control.	Approved Approvato	Issue Visto
	C						
	M						
	C						
	M						
	C						
	M						
	C						
1	M	11/04/93	ISSUED FOR INFORMATION	DEANA	DECORTI	CATT.	

REVISION - REVISIONI

MINISTRY OF MINES AND METALS

NISCO

ورود به دفتر اسناد فنی
شماره: ۱۸۵
تاریخ: ۶۹/۶/۲۰

ALLOY STEEL PROJECT

YAZD - IRAN

APPROVED:

مرکز اسناد فنی
تحویل شد
تاریخ: ۹۱/۷/۹
شرکت فولاد آلیاژی ایران

DVAI/BÖHLER
CONSULTANT ENGINEER

APPROVED: A102RU23/20

DANIELI CONSORTIUM MITSUBISHI CORPORATION

Item-Pos.	Unit-Gruppo
312	SD1103T2901200

Material-Materiale

ST44-2 DIN 17100
FE 430 B (FE420B-A FE410B) (EU 25)
UNI 7070/5335/4

Header treatment - Tratt. termico

Pattern - Modello | J=m.r²(Kg m²)

CODE - CODICE	CLASSIFICATION - CLASSIFICAZIONE	Obtained from - Ricav. da	Replace - Sostituisce
4.245867.B			

DRAWING - DISEGNO

TITLE - TITOLO:
PLANT UNIT 03

WASHER

Scale - Scala	Rev.
Mass - Massa: 4	Size - Form.: A 2
Sheet Foglio: 1	Follow Segue: /

DRAWING - DISEGNO
SD1103T2901200312

Rev. 1

FORMATO - A2 - 420 x 594

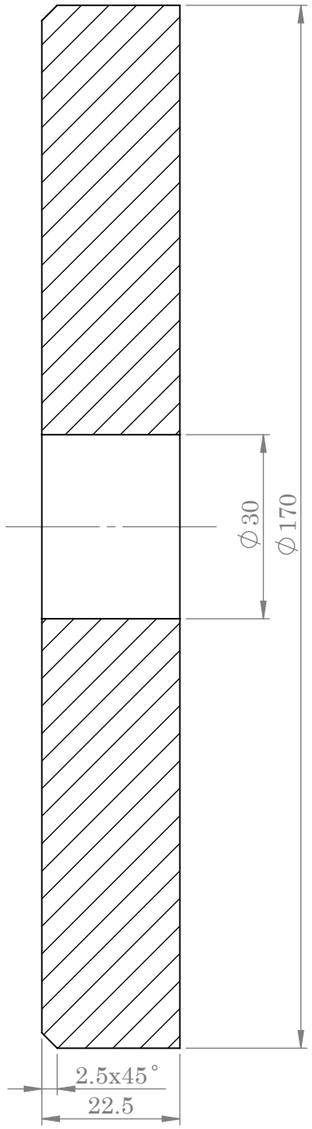

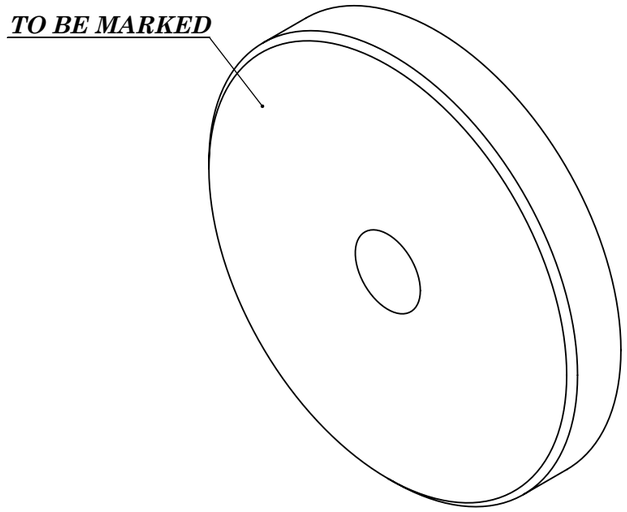

12.5

POS	QTY	DESCRIPTION	MATERIAL	UNIT MASS (kg)	TOTAL MASS (kg)	DANIELI CODE	ASSY . CODE
312	01	∅170x22.5	ST 44-2	4	4	4.245867.B	-

NOTE:
Dimension without tolerance follow:
ISO 2768-M
Material:
ST44-2 DIN 17100

	NAME	DATE
DES.		
DRA.	M.H.Fesahat	92/02/21
CHK.	A.Alamdar	92/02/22
APPR.	M.Minjalili	92/02/23

TITLE:

PLANT UNIT 03
WASHER

Afrab Pashan Co. Prod.

IRAN ALLOY STEEL CO

ORDER.	RF6/4.C7	REF.DRAW	***SD1103T2901200312*** REV
CODE No.	4.245867.B	DWG No.	***FD1103T2901200312*** 00
QCTM No.	BF50230.7	SCALE: 1 : 1	SIZE: A3 SHEET: 1 OF 1

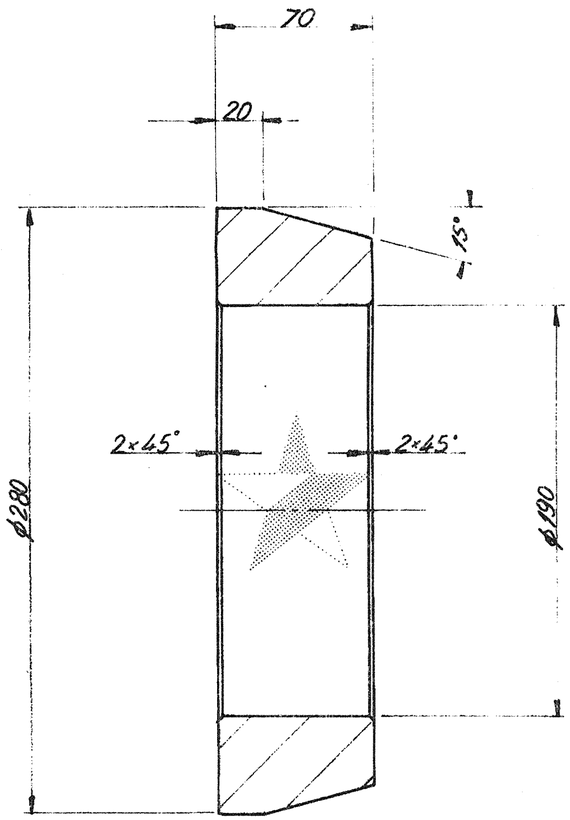

12/

TOLLERANZE GENERALI DI LAVORAZIONE
Scostamenti per quote senza tolleranze
secondo norma N. 2.4.016

GENERAL MACHINING TOLERANCES
Deviations for dimensions without
tolerance to spec. N. 2.4.016

DANIELI
14.09.94 900010
UFFICIO TECNICO

REV.	FILE	DATE DATA	DESCRIPTION DESCRIZIONE	Drawn Disegnato	Checked Control.	Approved Approvato	Issue Visto
	C						
	M						
	C						
	M						
	C						
	M						
1	C	11/04/93	ISSUED FOR INFORMATION	DEANA	DECORTI	CATT.	
	M						

REVISION - REVISIONI

MINISTRY OF MINES AND METALS

NISCO

ورود به دفتر اسناد فنی
شماره: ۱۸۵۶۱۶
تاریخ: ۷۹/۲/۲۰

APPROVED:
مرکز اسناد فنی
کنترل شد
تاریخ: ۸۹/۷/۸
شرکت فولاد آلیاژی ایران

ALLOY STEEL PROJECT

YAZD - IRAN

DVAI/BÖHLER
CONSULTANT ENGINEER

APPROVED: A102 RA23/21

DANIELI — CONSORTIUM — MITSUBISHI CORPORATION

CODE - CODICE	CLASSIFICATION - CLASSIFICAZIONE	Obtained from - Ricav. da	Replace - Sostituisce
4.245868.K			

DRAWING - DISEGNO

Rev.

TITLE - TITOLO:
PLANT UNIT 03
SPACER

Scale - Scala: 1:2

Mass - Massa: 16

Size - Form.: A 2

Sheet Foglio: 1

Follow Segue: /

DRAWING - DISEGNO: SD1103T2901200313

Rev.: 1

Item-Pos.	Unit-Gruppo
313	SD1103T2901200

Material-Materiale

ST44-2 DIN 17100
FE 430 B (FE420B-A FE410B) (EU 25)
UNI 7070/5335/4

Header treatment - Tratt. termico

Pattern - Modello | J=m.r²(Kg m²)

FORMATO – A2 – 420 x 594

EUROPRINTER

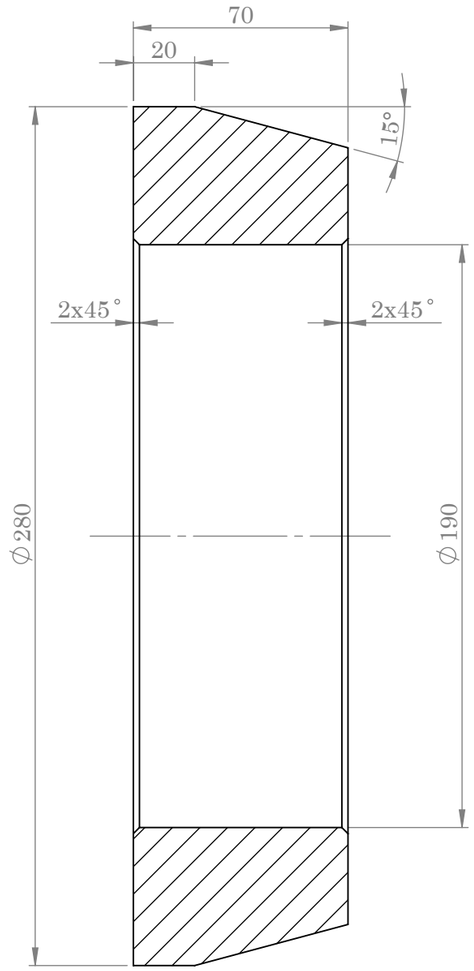

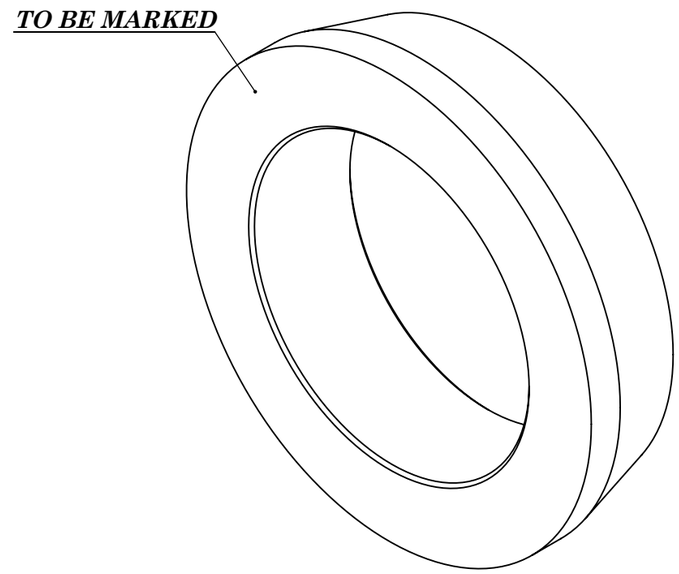

12.5

313	01	∅280x70	ST 44-2	16	16	4.245868.K	-
POS	QTY	DESCRIPTION	MATERIAL	UNIT MASS (kg)	TOTAL MASS (kg)	DANIELI CODE	ASSY . CODE

NOTE:

Dimension without tolerance follow:
ISO 2768-M
Material:
ST 44-2 DIN17100

	NAME	DATE
DES.		
DRA.	M.H.Fesahat	92/02/21
CHK.	A.Alamdar	92/02/22
APPR.	M.Minjalili	92/02/23

TITLE:

PLANT UNIT 03
SPACER

IRAN ALLOY STEEL CO

ORDER.	RF6/4.C8	REF.DRAW	***SD1103T2901200313*** REV
CODE No.	4.245868.K	DWG No.	***FD1103T2901200313*** 00
QCTM No.	BF50230.8	SCALE: 1 : 2	SIZE: A3 SHEET: 1 OF 1

BACK

SEZIONE A_A
SECTION

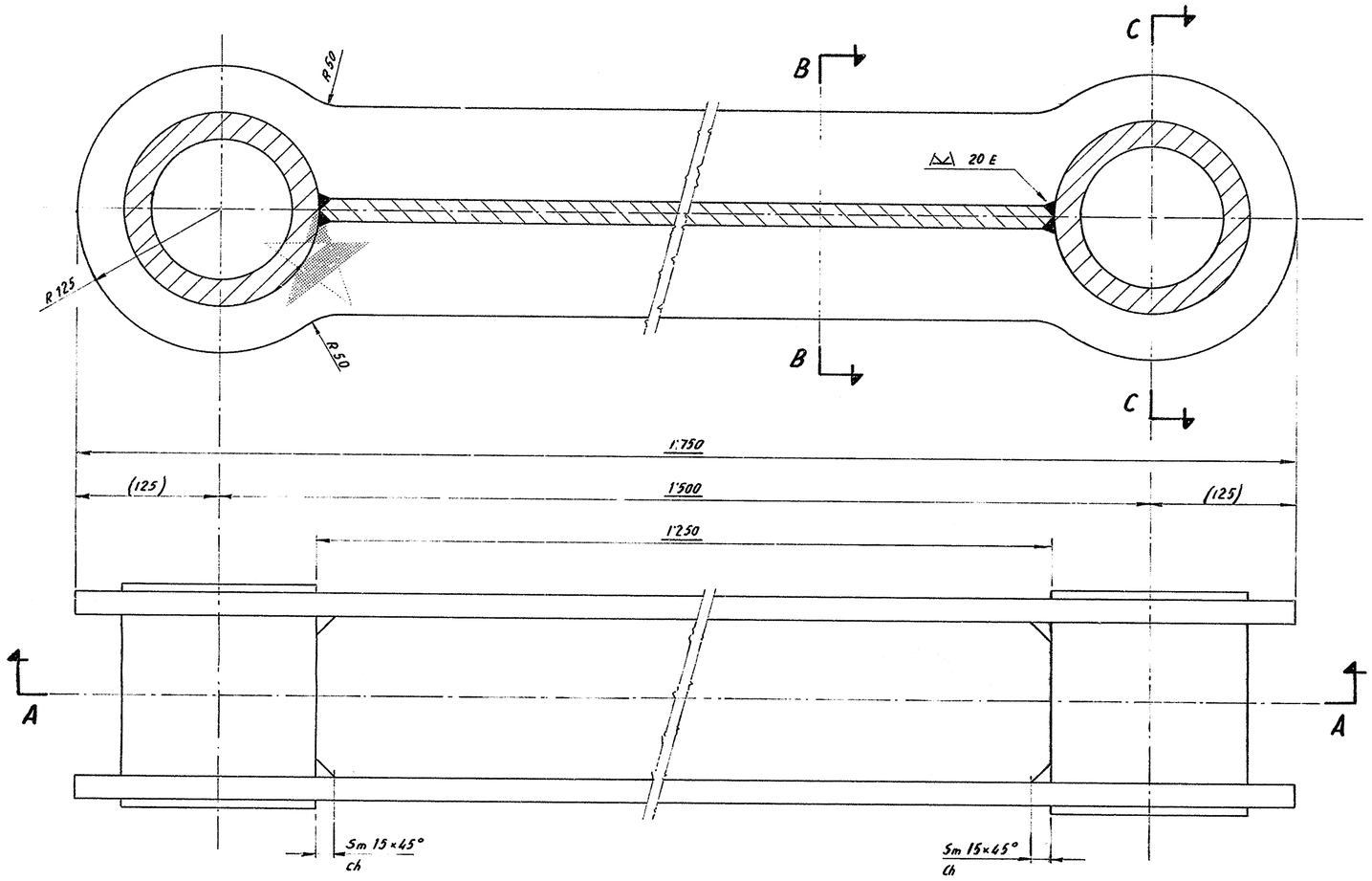

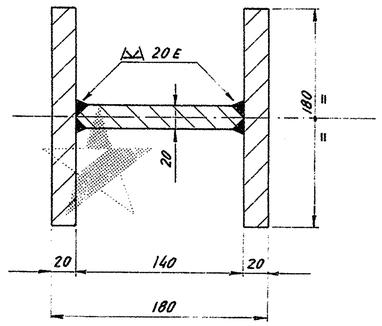

SEZIONE B_B
SECTION

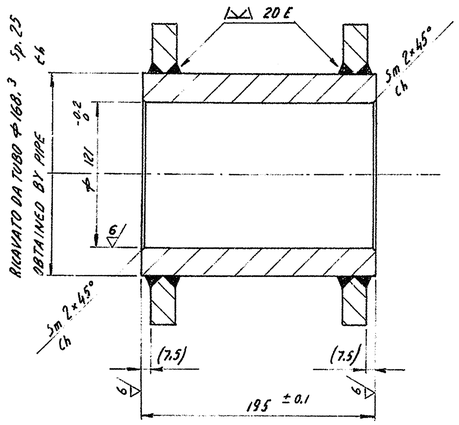

SEZIONE C_C
SECTION

SIMILE A 4.262916.V
SIMILAR TO

12/ [6/ ✓✓✓✓✓	CHAMFERED WITHOUT DIMENSIONED RADIUS WITHOUT DIMENSIONED

GENERALE MACHINING TOLLERANCES DEVIATIONS FOR DIMENSIONS WITHOUT TOLLERANCE TO SPECIFIED UNI 5307-63

COMPARAZIONE MATERIALE MATERIAL COMPARISON
Fe 410 2KW UNI 5869 HII DIN 17155 ASTM A516 Grade 70
Fe 55.1 UNI 7729 St 55 DIN 1629 1.1+3

Nota: tutte le saldature devono essere controllate al 100% dello sviluppo con esame radiografico (raggi X) e controllo agli ultrasuoni; grado di accettabilità secondo il raggruppamento "E" della UNI 7278-74.

Note: all weldings must be 100% checked through with radiographic inspection (X-rays) and ultrasonic waves control; acceptable degree according to the "E" group of the UNI 7278-74 standards.

REV.	FILE	DATE DATA	DESCRIPTION DESCRIZIONE	Drawn Disegnato	Checked Control.	Approved Approvato	Issue Visto
1		06/94	ISSUED FOR INFORMATION	SOOORMAN	DE CORTI	STUCCHI	

REVISIONI–REVISIONS

MINISTRY OF MINES AND METALS

NISCO

ALLOY STEEL PROJECT

YAZD - IRAN

APPROVED: مرکز اسناد کنترل شد تاریخ: ۷۹/۶/۲۰ شرکت فولاد آلیاژی ایران

DVAI/BÖHLER CONSULTANT ENGINEER

APPROVED: A62RA23/12

DANIELI CONSORTIUM MITSUBISHI CORPORATION

Item–Pos.	Unit – Gruppo
314	SD1103T2901200

Material – Materiale: P265GH EN 10028-2 st 52.0 IN 1629

Header treatment – Tratt. termico

MODELLO–PATTERN | J=m.r²(Kg m²)

CODE – CODICE: 4.280417.X

CLASSIFICATION – CLASSIFICAZIONE

Obtained from – Ricav. da

Replace – Sostituisce

DRAWING – DISEGNO

Rev. 1

TITLE – TITOLO:
PLANT UNIT 03
LEVER

Scale – Scala: 1:2.5

Mass – Massa: 130

Size – Form.: A1

Sheet Foglio: 1

Follow Segue: /

DRAWING – DISEGNO: SD1103T2901200314

Rev. 1

COMPUTER AIDED DESIGN

IRAN ALLOY STEEL CO.			شرکت فولاد آلیاژی ایران	
Date	1405/02/05	دفترچه مشخصات فنی Technical Specification Document	Document No	BA20182
IASCo Code	4.280417.X		Material	-
Description	LEVER FOR LADLE		POS	314

1– بازرسی

	DESCRIPTION OF TEST		STD TEST	INSPECTION TYPE	REQUIRED TEST	SPECIFICATION		
1	*Analyze of material*		*Report of a valid laboratory/company*	*R*	✓	-		
2	*Visual and dimensional check*		*Dwg & Specif.*	*R*	✓	*Check by **Tool***		
3	*Fit up*	*Assembly*	-	*W*	✓	-		
		Beveling & Gap check & Hi-lo	*DANIELI 2.8.114* *DANIELI 2.8.115*					
4	*NDT on welding*		*DANIELI 2.8.114* *DANIELI 2.8.115*	*H*	✓	*VT / DT %*	*UT %*	-
						%100	*%100*	-
						Acceptance criteria according to AWS D14.4/D14.4M		***II***
5	*NDT on casting*		*DANIELI 2.8.004* *DANIELI 2.8.005* *DANIELI 2.8.017*	*H*		*VT / DT %*	*PT %*	*UT %*
						-	-	-
						Case of Casting		-
6	*NDT on forging & rolled bars*		*DANIELI 2.8.001* *DANIELI 2.8.009*	*R*	✓	*VT / DT %*	*PT %*	*UT %*
						-	-	*%100*
						Forging or Rolled bar class		***C***
7	*Tensile test*		*ISO 6892*	*R*	✓	***for St52***		
8	*Impact test*		*ISO 148*	*R*		-		
9	*Metallographic structure*		*DANIELI 2.8.004* *DANIELI 2.8.017*	*R*		-		
10	*Elastomer properties*		*ASTM D 2240* *ASTM D 395*	*R*		*Hardness:*	-	
						% Compression set:	-	
11	*Heat treatment cycle*		*DANIELI 2.8.300* *DANIELI 2.8.101*	*R*	✓	*Cycle*	*Stress relieving*	-
						Hardness	-	-
						Depth	-	-
12	*Coating*		*Report of a valid laboratory or company*	*R*		*Type*	-	
						Hardness	-	
						Thick	-	
13	*Balancing*		*ISO1940-1*	*R*		*Speed:*	-	*Quality grade:* -
14	*Pressure test / leak test*		*DANIELI 2.8.102*	*W*		-		
15	*Surface Protection inspection, painting*		*DANIELI 2.8.302*	*R*	✓	*Cycle:*	*K*	***RAL: Inorganic zinc color***
16	*Marking & Packing*		*DANIELI 2.8.002*	*W*	✓	*Marking with Engraving*		
						-		

R(REVIEW) : بررسی مدارک QC سازنده H(HOLD) : ادامه تولید با اجازه بازرسِ کارفرما W(WITNESS): الزام هماهنگی با بازرسِ کارفرما جهت اجرای فرآیند

BACK

REV.	DATE	DESCRIPTION	DRN

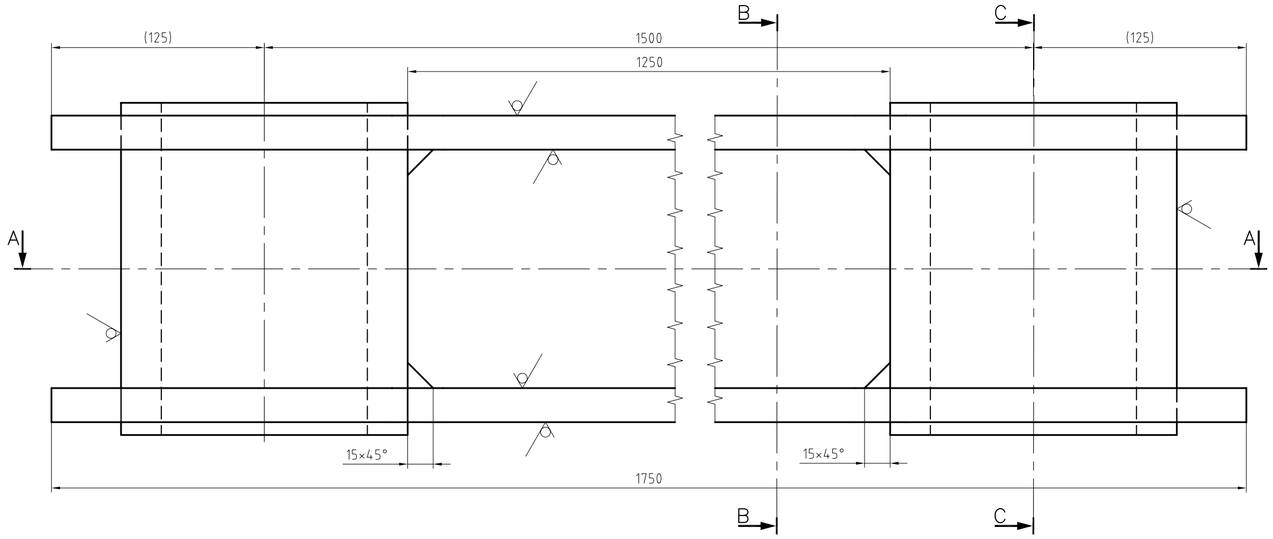

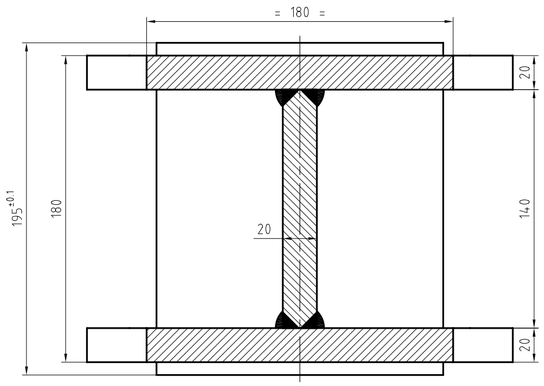

SECTION"B-B"

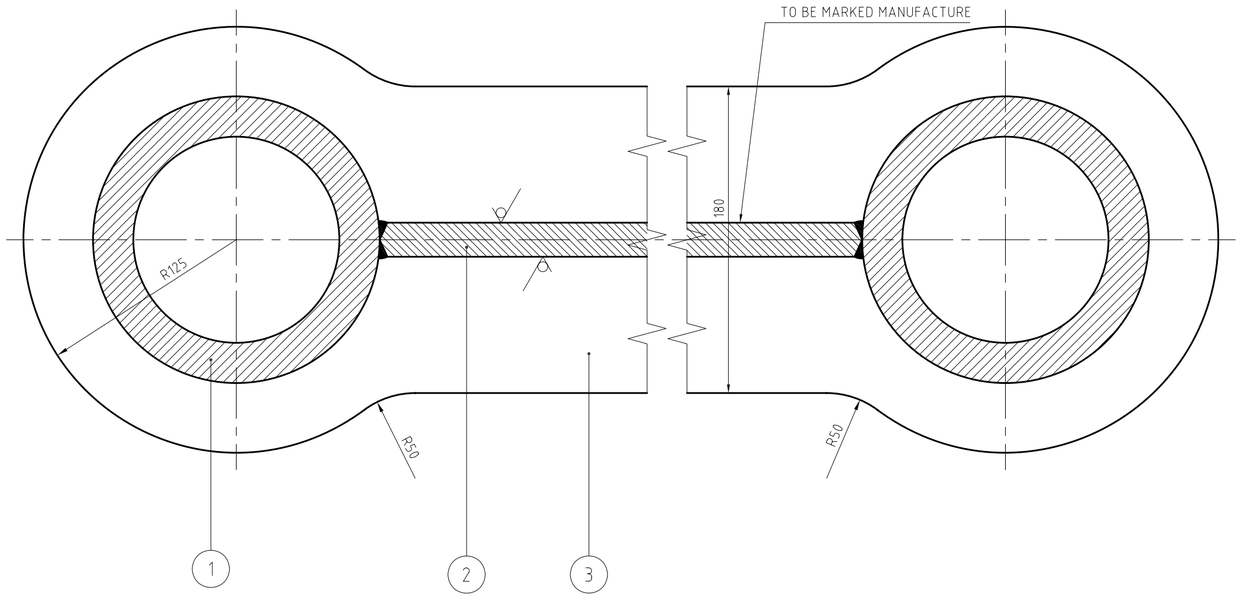

SECTION"A-A"

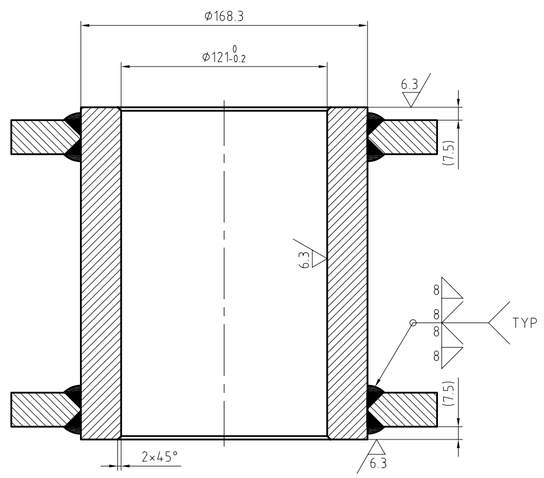

SECTION"C-C"

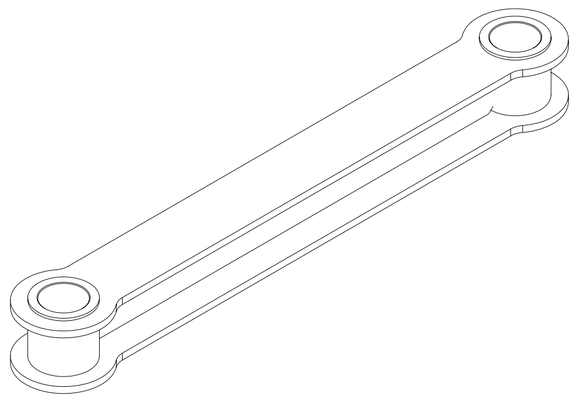

12.5 (6.3 ✓)

POS	QTY	DESCRIPTION	MATERIAL	UNIT MASS	TOTAL MASS	REFERENCE
3	2	PLEAT	(st52.0)	44.4 Kg	88.8 Kg	
2	1	PLEAT	P265GH (st52.0)	29.16 Kg	29.16 Kg	
1	2	PIPE Φ168.3 ×25	P265GH (st52.0)	16.4 Kg	32.8 Kg	DIN 2448

NOTE: DIMENSION WITHOUT TOLERANCE ACC.TO DIN ISO 2768 mk

ISO 128

	DATE	NAME
DRN.	90/07/10	M.N
CHE.		
APPR.		

SIZE: A2
SCALE: 1:2.5

ADIB TARH ARYAN

TITLE: LEVER MATERIAL:FE 410 2KW/ASTM A516 GRADE 70

IRAN ALLOY STEEL CO.

CODE ASSY:	ORDER	REFRENCE DRAWING NO:	SHEET
	RA48-5	SD1103T2901200314	1 OF 1
CODE NO: 4.280417.X	QCTM NO. BA20182	DRAWING NO: AD1103T2901200314	REV. 0

Dimen. Fit

NOTE:

-STRESS RELIEVE AFTER WELDING AND BEFORE MACHINING

-ALL WELDINGS MUST BE 100% CHECKED THROUGH WITH RADIOGRAPHIC INSPECTION (X-RAYS)
AND ULTRASONIC WAVES CONTROL ACCEPTABLE DEGREE ACCORDING TO THE "E" GROUP OF THE UNI 7278-74 STANDARDS

SEZIONE A.A
SECTION

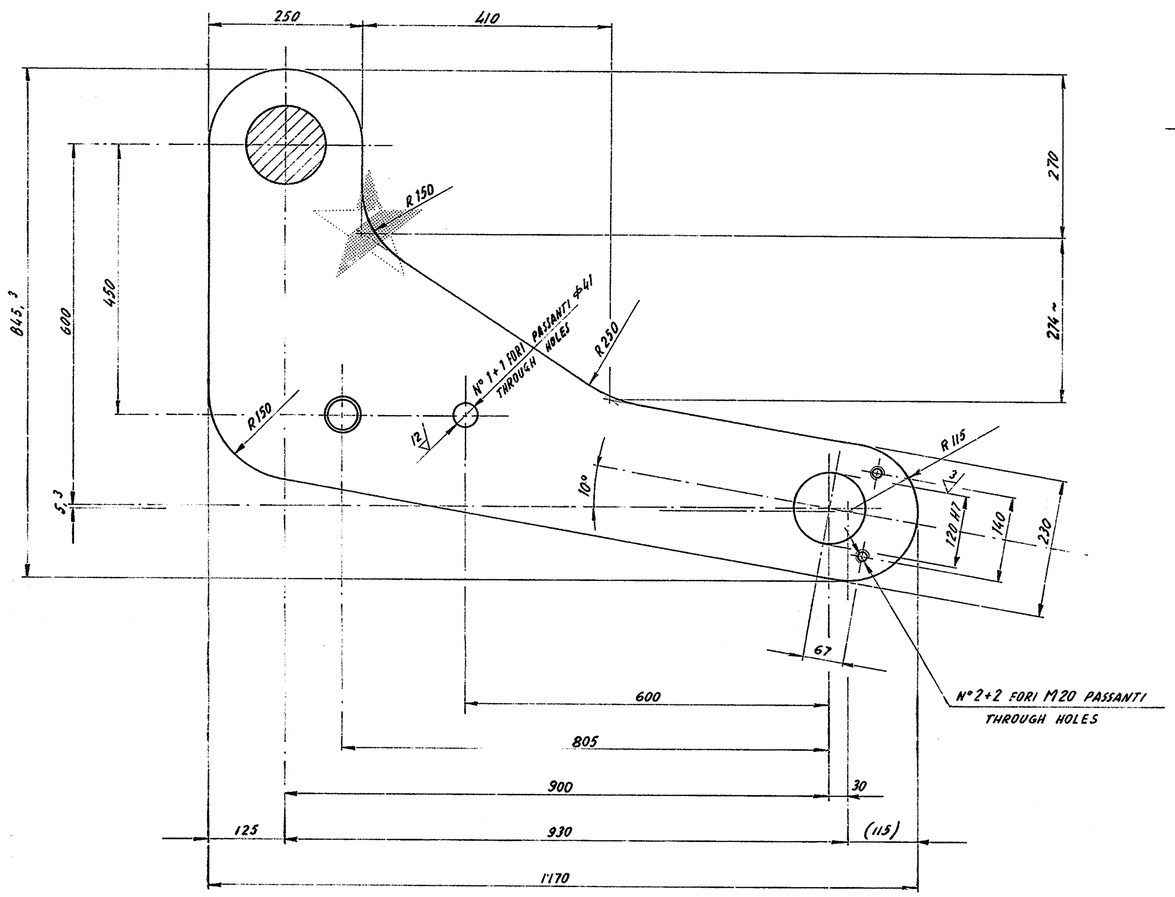

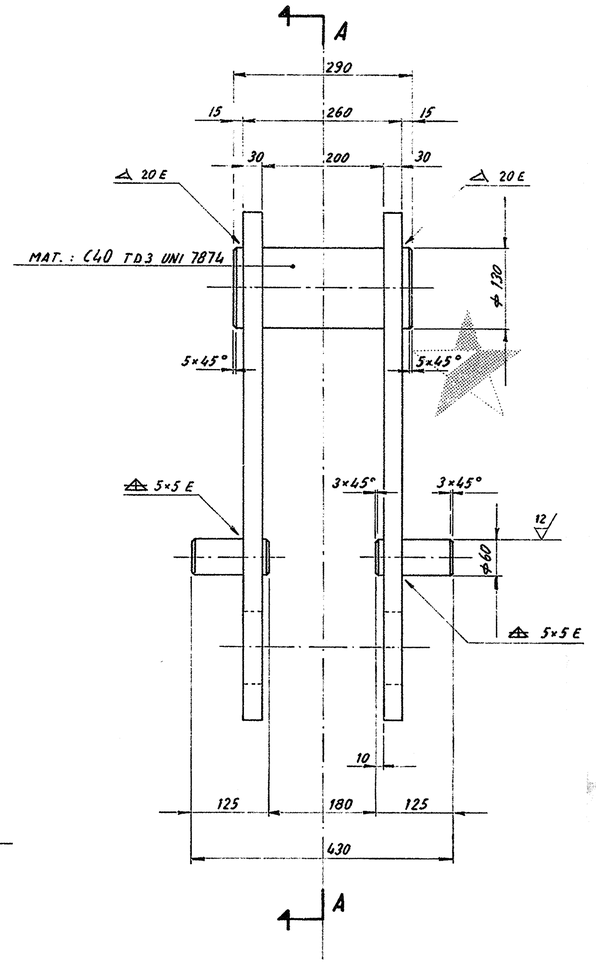

SIMILE A 4.262919.F
SIMILAR TO

	C M						
	C M						
	C M						
1	C M	06/94	ISSUED FOR INFORMATION	SOOORMAN	DE CORTI	STUCCHI	
REV.	FILE	DATE DATA	DESCRIPTION DESCRIZIONE	Drawn Disegnato	Checked Control.	Approved Approvato	Issue Visto

REVISIONI – REVISIONS

MINISTRY OF MINES AND METALS

NISCO

ALLOY STEEL PROJECT

YAZD - IRAN

APPROVED:

DVAI/BÖHLER
CONSULTANT ENGINEER

APPROVED: A102 Ra 23/13

DANIELI CONSORTIUM MITSUBISHI CORPORATION

CODE – CODICE	CLASSIFICATION – CLASSIFICAZIONE	Obtained from – Ricav. da	Replace – Sostituisce
4.280418.F			

DRAWING – DISEGNO

TITLE – TITOLO:
PLANT UNIT 03
LEVER

Scale – Scala: 1:5
Mass – Massa: 218
Size – Form.: A1
Sheet Foglio: 1
Follow Segue: /
Rev.: 1

DRAWING – DISEGNO: SD1103T2901200315
Rev.: 1

315	SD1103T2901200
Item–Pos.	Unit – Gruppo

Material – Materiale
P265GH EN 10028-2
st 52.0 DIN 1629

LEVER PIN

Header treatment – Tratt. termico

MODELLO–PATTERN | J=m.r²(Kg m²)

12/	CHAMFERED WITHOUT DIMENSIONED
12/ 3/	RADIUS WITHOUT DIMENSIONED

GENERALE MACHINING TOLLERANCES DEVIATIONS FOR DIMENSIONS WITHOUT TOLLERANCE TO SPECIFIED UNI 5307-63

COMPARAZIONE MATERIALE MATERIAL COMPARISON
Fe 410 2KW UNI 5869 H11 DIN 17155 ASTM A516 Grade 70
C 40 TD3 UNI 7845 CK 45 DIN 17200 ASTM A235 Grade E

Nota: tutte le saldature devono essere controllate al 100% dello sviluppo con esame radiografico (raggi X) e controllo agli ultrasuoni; grado di accettabilità secondo il raggruppamento "E" della UNI 7278-74.

Note: all weldings must be 100% checked through with radiographic inspection (X-rays) and ultrasonic waves control: acceptable degree according to the "E" group of the UNI 7278-74 standards.

COMPUTER AIDED DESIGN

IRAN ALLOY STEEL CO.			شرکت فولاد آلیاژی ایران	
Date	1405/02/05	دفترچه مشخصات فنی Technical Specification Document	Document No	BF70116
IASCo Code	4.280418.F		Material	-
Description	LEVER		POS	315

1– بازرسی

	DESCRIPTION OF TEST		STD TEST	INSPECTION TYPE	REQUIRED TEST	SPECIFICATION		
1	*Analyze of material*		*Report of a valid laboratory/company*	*R*	✓	-		
2	*Visual and dimensional check*		*Dwg & Specif.*	*R*	✓	*Check by **Tool***		
3	*Fit up*	*Assembly*	-	*W*	✓	-		
		Beveling & Gap check & Hi-lo	*DANIELI 2.8.114* *DANIELI 2.8.115*					
4	*NDT on welding*		*DANIELI 2.8.114* *DANIELI 2.8.115*	*H*	✓	*VT / DT %*	*MT %*	-
						%100	*%100*	-
						Acceptance criteria according to AWS D14.4/D14.4M		***II***
5	*NDT on casting*		*DANIELI 2.8.004* *DANIELI 2.8.005* *DANIELI 2.8.017*	*H*		*VT / DT %*	*PT %*	*UT %*
						-	-	-
						Case of Casting		-
6	*NDT on forging & rolled bars*		*DANIELI 2.8.001* *DANIELI 2.8.009*	*R*	✓	*VT / DT %*	*PT %*	*UT %*
						-	-	*%100*
						Forging or Rolled bar class		***C***
7	*Tensile test*		*ISO 6892*	*R*	✓	***for St52***		
8	*Impact test*		*ISO 148*	*R*		-		
9	*Metallographic structure*		*DANIELI 2.8.004* *DANIELI 2.8.017*	*R*		-		
10	*Elastomer properties*		*ASTM D 2240* *ASTM D 395*	*R*		*Hardness:*	-	
						% Compression set:	-	
11	*Heat treatment cycle*		*DANIELI 2.8.300* *DANIELI 2.8.101*	*R*	✓	*Cycle*	*Stress relieving*	-
						Hardness	-	-
						Depth	-	-
12	*Coating*		*Report of a valid laboratory or company*	*R*		*Type*	-	
						Hardness	-	
						Thick	-	
13	*Balancing*		*ISO1940-1*	*R*		*Speed:*	-	*Quality grade:* -
14	*Pressure test / leak test*		*DANIELI 2.8.102*	*W*		-		
15	*Surface Protection inspection, painting*		*DANIELI 2.8.302*	*R*	✓	*Cycle:*	*K*	***RAL: Inorganic zinc color***
16	*Marking & Packing*		*DANIELI 2.8.002*	*W*	✓	*Marking with Engraving*		
						-		

R(REVIEW) : بررسی مدارک QC سازنده H(HOLD) : ادامه تولید با اجازه بازرسِ کارفرما W(WITNESS): الزام هماهنگی با بازرسِ کارفرما جهت اجرای فرآیند

SECTION A-A
SCALE 1 : 5

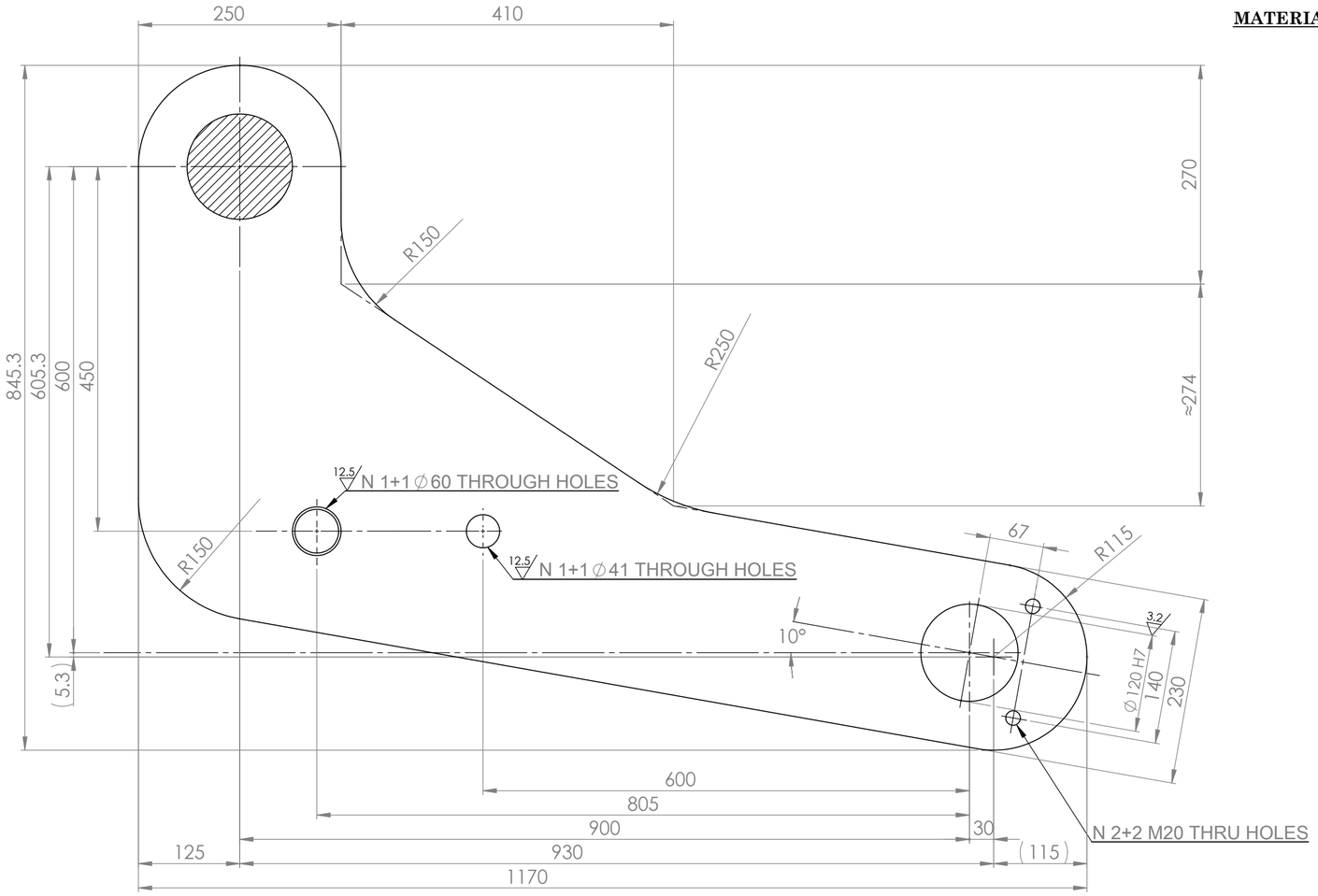

MATERIAL:CK 45 DIN 17200

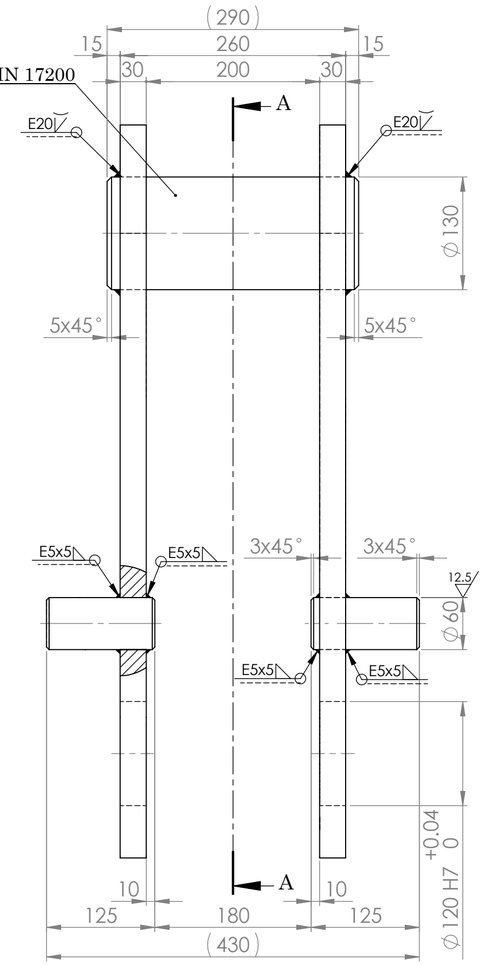

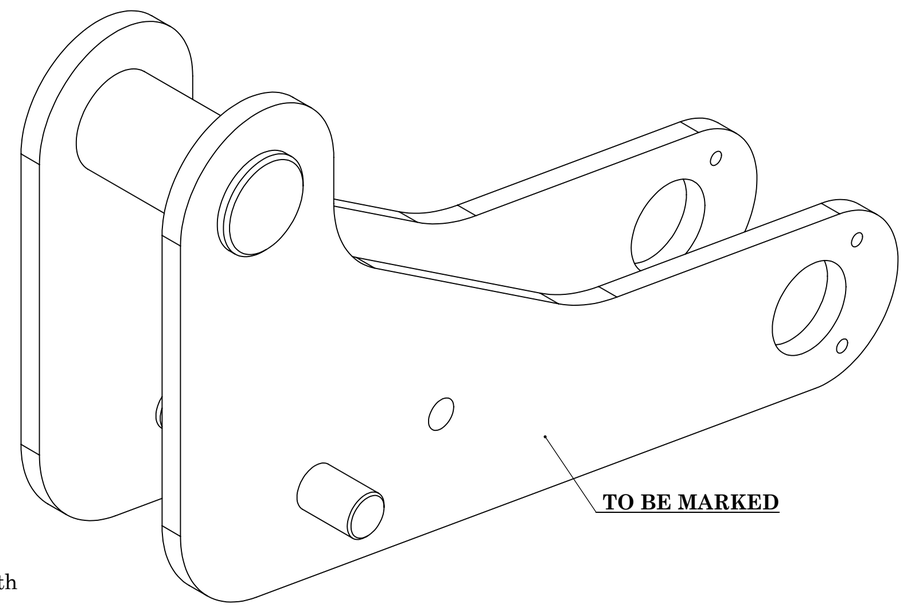

NOTE :(lever pin)
All weldings must be 100% checked through with radiographic inspection (x-rays) and ultrasonic **waves control:**accetable degree according to the **<E>** group of the UNI 7218-74 standards.

P265GH equal ST 44-2

(12.5 , 3.2)

POS	QTY	DESCRIIPTION	MATERIAL	MASS UNIT	MASS TOTAL	DANIELI CODE	ASSY . CODE
315	01	1170x845.3x290	P265GH	218 kg	218 kg	4.280418.F	-

NOTE:
Dimension without tolerance follow: ISO 2768-M
Material: P265GH EN 10028-2

	NAME	DATE
DES		
DRA	A.ALAMDAR	90/11/12
CHK.	M.MIRJLLLI	90/11/13
APPR	M.farrokhi	90/11/14

TITLE:
PLANT UNIT 03
LEVER

ATYCO

IRAN ALLOY STEEL CO

ORDER	RI34/5	REF.DRAW	SD1103T2901200315
CODE NO.	4.280418.F	DWG NO.	ID1103T2901200315
QCTM NO.	BI30116	SCALE: 1 : 5	SIZE: A2

REV 00

SHEET: 1 OF 1

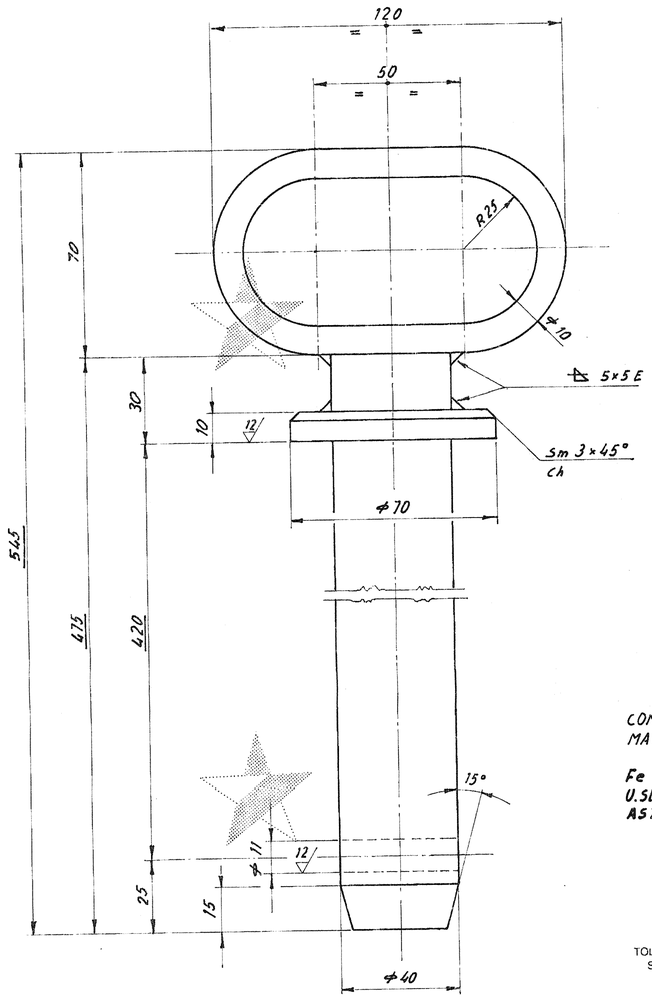

COMPARAZIONE MATERIALE
MATERIAL COMPARISON

Fe 360 B UNI 7070
U.St 37.2 DIN 17100
ASTM A 283 Grade C

12 [12]

TOLLERANZE GENERALI DI LAVORAZIONE
Scostamenti per quote senza tolleranze
secondo norma N. 2.4.016

GENERAL MACHINING TOLERANCES
Deviations for dimensions without
tolerance to spec. N. 2.4.016

SIMILE A 4.262876.D
SIMILAR TO

DANIELI
14.02.94 900056
UFFICIO TECNICO

REV.	FILE	DATE DATA	DESCRIPTION DESCRIZIONE	Drawn Disegnato	Checked Control.	Approved Approvato	Issue Visto
C							
M							
C							
M							
C							
M							
C							
M							
1		11/11/93	ISSUED FOR INFORMATION	DEANA	DECORTI	CATT.	

REVISION - REVISIONI

MINISTRY OF MINES AND METALS
NISCO
ALLOY STEEL PROJECT
YAZD - IRAN

APPROVED:

DVAI/BÖHLER
CONSULTANT ENGINEER

APPROVED: A102R023/14

DANIELI CONSORTIUM MITSUBISHI CORPORATION

Item-Pos.	Unit-Gruppo
316	SD1103T2901200

Material-Materiale
UST37-2 DIN 17100
FE 360 (FE 37B) - FE 360 B (ISO 630)
UNI 7070

Header treatment - Tratt. termico

Pattern - Modello | J=m.r²(Kg m²)

CODE - CODICE	CLASSIFICATION - CLASSIFICAZIONE	Obtained from - Ricav. da	Replace - Sostituisce
4.280419.G			

DRAWING - DISEGNO

Rev.

TITLE - TITOLO:
PLANT UNIT 03
PIN

Scale - Scala: 1:1
Mass - Massa: 5
Size - Form.: A 1
Sheet Foglio: 1
Follow Segue: /

DRAWING - DISEGNO
SD1103T2901200316

1

FORMATO - A1 - 594 x 841

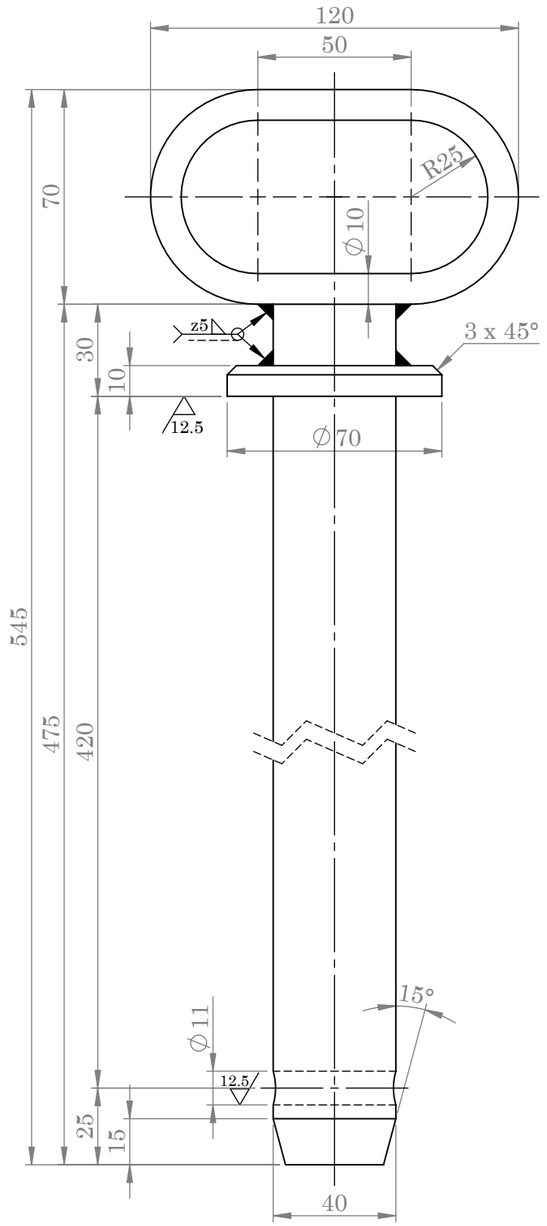

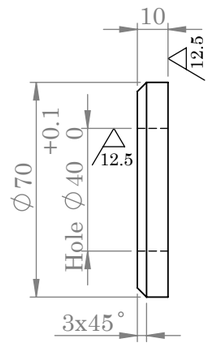

PIECE No. 002
SCALE 1:2

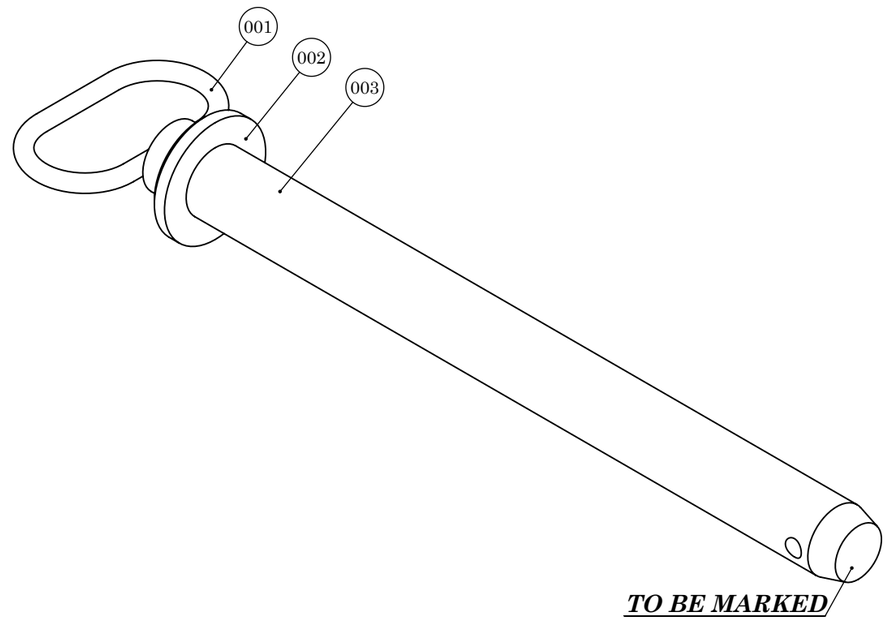

TO BE MARKED

12.5 / 12.5 (▽)

POS	QTY	DESCRIPTION	MATERIAL	UNIT MASS (kg)	TOTAL MASS (kg)	DANIELI CODE	ASSY . CODE
003	01	SHAFT ∅40x475	UST 37-2	-	-	-	4.280419.G
002	01	D:70,d:40,L:10	UST 37-2	-	-	-	4.280419.G
001	01	ROD ∅10x288.5	UST 37-2	-	-	-	4.280419.G
316	01	ASSEMBLY	-	5	5	4.280419.G	-

NOTE:
Dimension without tolerance follow:
ISO 2768-M
Material:
UST 37-2 DIN 17100

	NAME	DATE
DES.		
DRA.	M.H.Fesahat	92/02/22
CHK.	A.Alamdar	92/02/23
APPR.	M.Minjalili	92/02/24

TITLE:
PLANT UNIT 03
PIN

IRAN ALLOY STEEL CO

ORDER.	RF6/4.C9	REF.DRAW	***SD1103T2901200316*** REV
CODE No.	4.280419.G	DWG No.	***FD1103T2901200316*** 00
QCTM No.	BF50230.9	SCALE: 1 : 2	SIZE: A3 SHEET: 1 OF 1

NOTE:
Mat. Comparison:
Fe 360 B UNI 7070
UST 37.2 DIN 17100
ASTM A283 Grade C

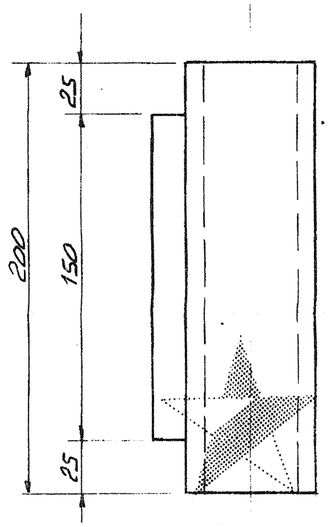

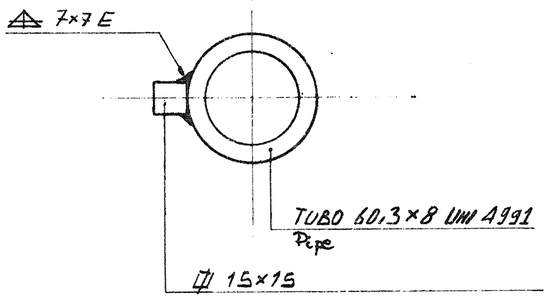

DANIELI
14.09.94 900049
UFFICIO TECNICO

REV.	FILE	DATE DATA	DESCRIPTION DESCRIZIONE	Drawn Disegnato	Checked Control.	Approved Approvato	Issue Visto
	C						
	M						
	C						
	M						
	C						
	M						
	C						
1	M	19/12/93	ISSUED FOR INFORMATION	DEANA	DECORTI	CATT.	

REVISION - REVISIONI

MINISTRY OF MINES AND METALS

NISCO

ALLOY STEEL PROJECT

YAZD - IRAN

ورود به دفتر اسناد فنی
شماره: ۸۸۰۶۱۲
۸۴/۶/۲۰

APPROVED:
مرکز اسناد فنی
کنترل شد
تاریخ: ۸۴/۶/۲۰
شرکت فولاد آلیاژی ایران

DVAI/BÖHLER
CONSULTANT ENGINEER

APPROVED: A102R023/22

DANIELI CONSORTIUM MITSUBISHI CORPORATION

Item-Pos.	Unit-Gruppo
317	SD1103T2901200

Material-Materiale

ST44-2 DIN 17100
FE 430 B (FE420B-A FE410B) (EU 25)
UNI 7070/5335/4

ST55 DIN 1629
FE 55-1 (FE540I - AQ55)
UNI 663/7945

Header treatment - Tratt. termico

Pattern - Modello | J=m.r²(Kg m²)

CODE - CODICE	CLASSIFICATION - CLASSIFICAZIONE	Obtained from - Ricav. da	Replace - Sostituisce
4.280099.C			

DRAWING - DISEGNO

TITLE - TITOLO:
PLANT UNIT 03
SUPPORT

Scale - Scala: 1:2
Mass - Massa: 2,30
Size - Form.: A 2
Sheet Foglio: 1
Follow Segue: /
Rev.: 1

DRAWING - DISEGNO
SD1103T2901200317

FORMATO - A2 - 420 x 594
EUROPRINT

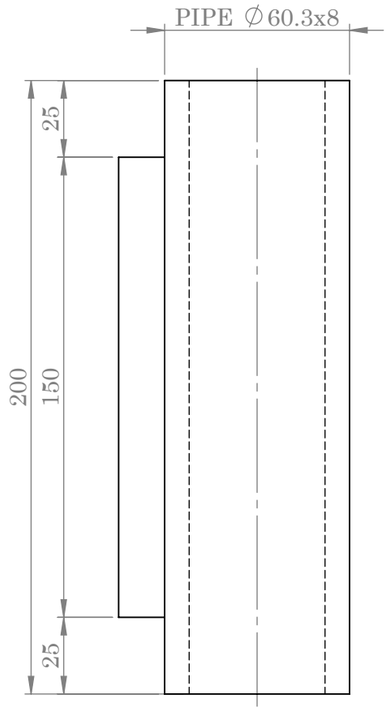

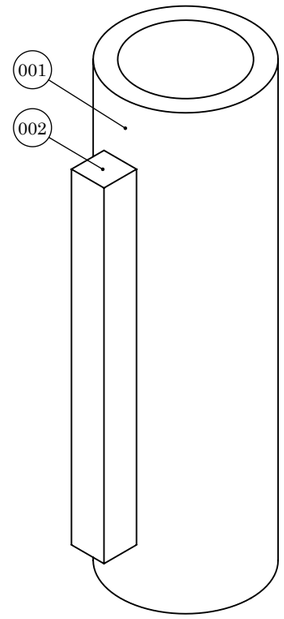

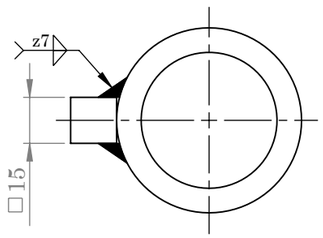

POS	QTY	DESCRIPTION	MATERIAL	MASS (kg) UNIT	MASS (kg) TOTAL	DANIELI CODE	ASSY . CODE
002	01	□ 15x15 , L:150	ST 44-2	-	-	-	4.280099.C
001	01	Pipe ∅60.3x8 , L:200	ST 55	-	-	-	4.280099.C
317	01	ASSEMBLY	-	2.3	2.3	4.280099.C	-

NOTE:
Dimension without tolerance follow:
ISO 2768-M
Material:
ST 44-2 DIN 17100
ST 55 DIN 1629

	NAME	DATE
DES.		
DRA.	M.H.Fesahat	92/02/21
CHK.	A.Alamdar	92/02/22
APPR.	M.Minjalili	92/02/23

TITLE:

PLANT UNIT 03
SUPPORT

IRAN ALLOY STEEL CO

ORDER.	RF6/4.C10	REF.DRAW	***SD1103T2901200317***	REV
CODE No.	4.280099.C	DWG No.	***FD1103T2901200317***	00
QCTM No.	BF50230.10	SCALE: 1 : 2	SIZE: A3	SHEET: 1 OF 1

COMPARAZIONE MATERIALE
MATERIAL COMPARISON

C40 TD3 UNI 7845
CK45 DIN 17200
ASTM A235 GRADE E

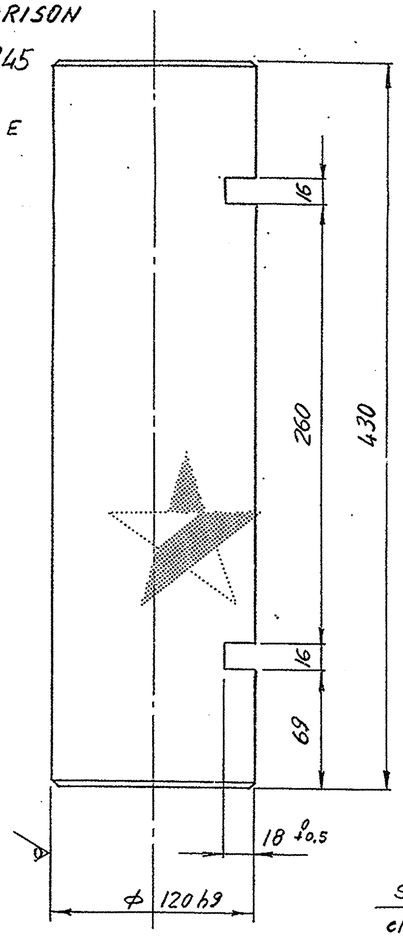

6/ [✓]
SMUSSI 3x45°
chamfer

SIMILE A 4.262920.D
SIMILAR TO

TOLLERANZE GENERALI DI LAVORAZIONE
Scostamenti per quote senza tolleranze
secondo norma N. 2.4.016

GENERAL MACHINING TOLERANCES
Deviations for dimensions without
tolerance to spec. N. 2.4.016

REV.	FILE	DATE DATA	DESCRIPTION DESCRIZIONE	Drawn Disegnato	Checked Control.	Approved Approvato	Issue Visto
1	CMC M	06/94	ISSUED FOR INFORMATION	SOODRMAN	DE CORTI	STUCCHI	

REVISIONI – REVISIONS

MINISTRY OF MINES AND METALS
NISCO
ALLOY STEEL PROJECT
YAZD - IRAN

ورود به دفتر اسناد فنی
شماره: ۱۸۵/۴/۱۲
تاریخ: ۷۹/۶/۲۰

APPROVED:
مرکز اسناد فنی
کنترل شد
تاریخ: ۷۹/۶/۲۰
شرکت فولاد آلیاژی ایران

DVAI/BÖHLER
CONSULTANT ENGINEER

APPROVED: A102RQ23123

DANIELI CONSORTIUM MITSUBISHI CORPORATION

Item–Pos.	Unit – Gruppo
318	SD1103T2901200

Material – Materiale
2C 4D EN 10083

Header treatment – Tratt. termica

MODELLO–PATTERN | J=m.r²(Kg m²)

CODE – CODICE: 4.280420.E
CLASSIFICATION – CLASSIFICAZIONE
Obtained from – Ricav. da
Replace – Sostituisce

DRAWING – DISEGNO
Rev. 1

TITLE – TITOLO:
PLANT UNIT 03
PIN

Scale – Scala 1:2.5
Mass – Massa 38
Size – Form. A2
Sheet Foglio 1
Follow Segue /

DRAWING – DISEGNO
SD1103T2901200318
Rev. 1

COMPUTER AIDED DESIGN

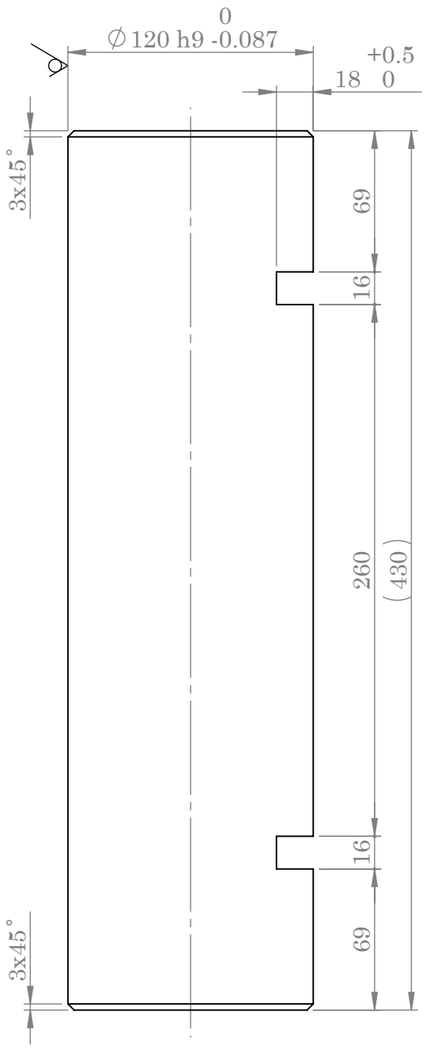

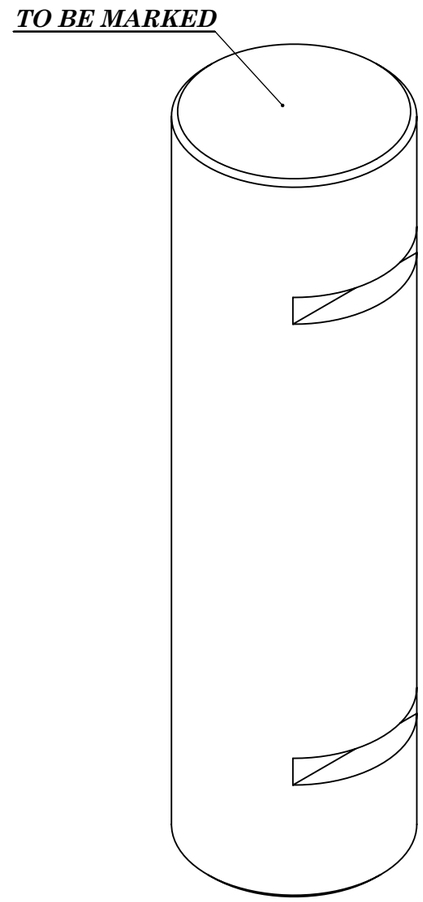

6.3 ( )

POS	QTY	DESCRIPTION	MATERIAL	UNIT MASS (kg)	TOTAL MASS (kg)	DANIELI CODE	ASSY . CODE
318	01	SHAFT ∅120x430	CK 45	38	38	4.280420.E	-

NOTE:
Dimension without tolerance follow:
ISO 2768-M
Material:
CK 45 DIN 17200

	NAME	DATE
DES.		
DRA.	M.H.Fesahat	92/02/22
CHK.	A.Alamdar	92/02/23
APPR.	M.Mirjalili	92/02/24

TITLE:
PLANT UNIT 03
PIN

IRAN ALLOY STEEL CO

ORDER.	RF6/4.C11	REF.DRAW	***SD1103T2901200318***	REV
CODE No.	4.280420.E	DWG No.	***FD1103T2901200318***	00
QCTM No.	BF50230.11	SCALE: 1 : 3	SIZE: A3	SHEET: 1 OF 1

NOTE:
Mat. Comparison:
C 40 TD3 UNI 7845
CK45 DIN 17200
ASTM A235 Grade E

CP MANUFACTURING INFORMATION			9E25928
R.M.	QTY	DESCRIPTION	
–	–	–	

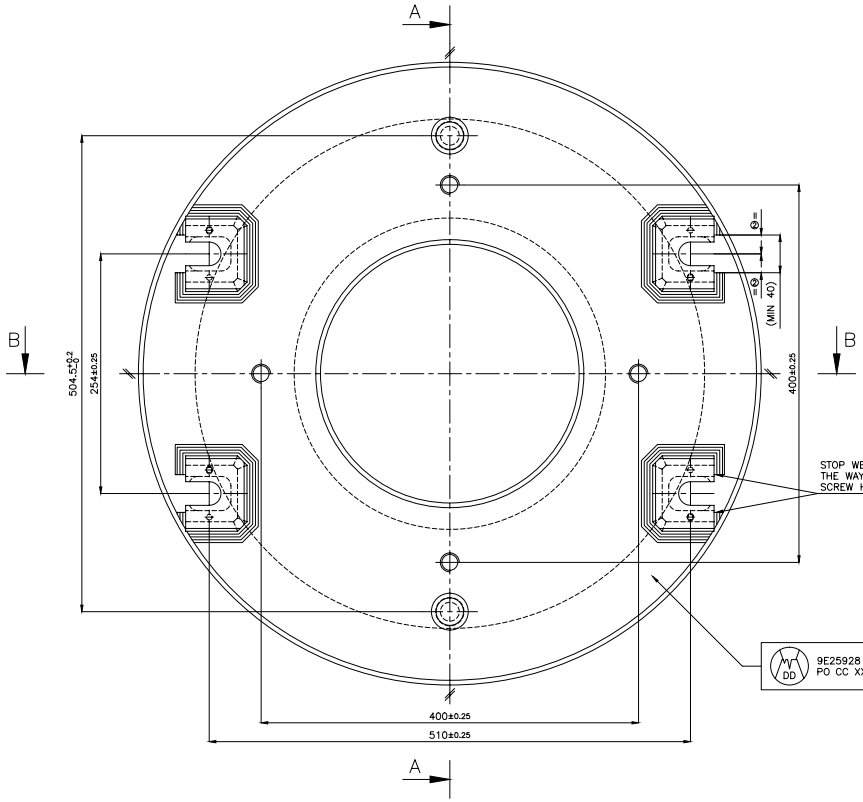

SECTION A–A

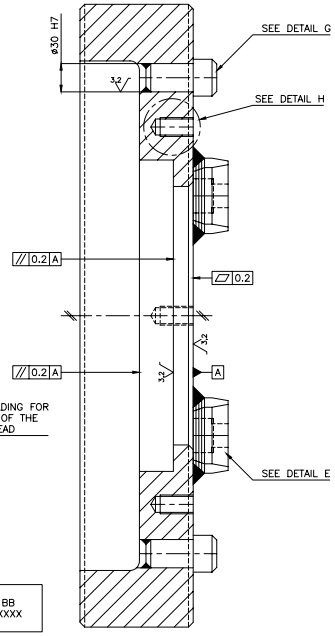

DETAIL D

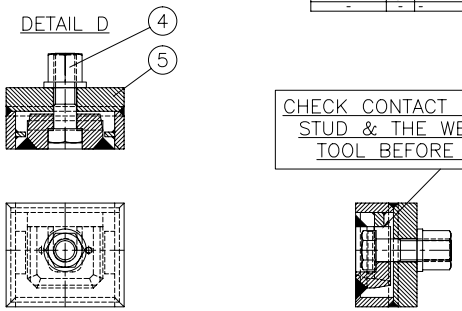

CHECK CONTACT BETWEEN THE STUD & THE WELDING TEST TOOL BEFORE SCREWING

SECTION B–B

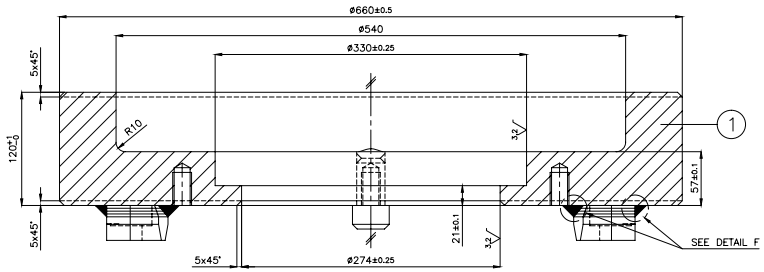

DETAIL F – SCALE 1/1 ①

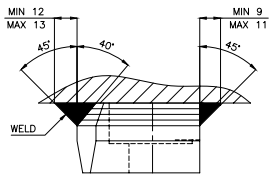

DETAIL E – SCALE 1/1

GENERAL TOLERANCE : ±0.25mm ①

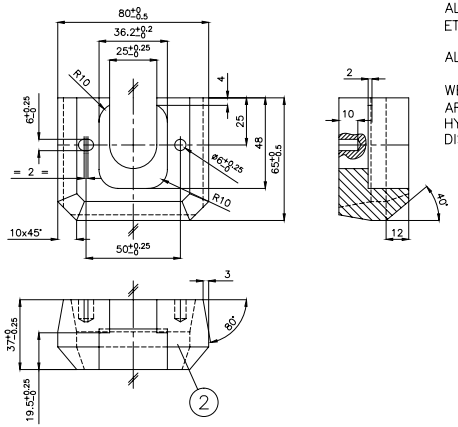

SECTION C–C

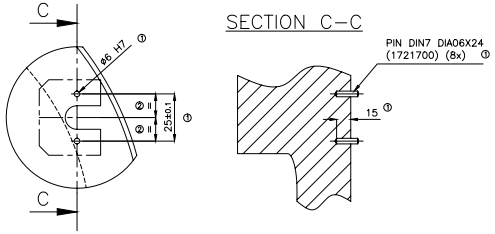

DETAIL H – SCALE 1/1

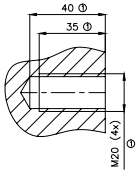

DETAIL G

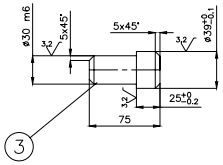

PROCEDURE FOR TESTING WELDS ON STUDS :

THIS PROCEDURE IS TO BE USED ON EACH OF THE FOUR STUDS ON EACH LADLE BOTTOM RING.

AFTER THE STUDS HAVE BEEN WELDED TO THE LADLE BOTTOM RING AND HAVE BEEN VISUALLY INSPECTED AND APPROVED BY A QUALIFIED WELD INSPECTOR, USE THE FOLLOWING PROCEDURE TO TEST FOR WELD STRENGTH.

1. CLEAN ALL DEBRIS FROM THE SURFACE OF THE LADLE BOTTOM RING AND WELDIND TEST TOOL (ITEM 5) TO ENSURE THERE IS NOTHING THAT WILL KEEP THE TEST FIXTURE FROM RESTING SQUARELY ON THE LADLE BOTTOM RING.

2. APPLY A SMALL AMOUNT OF L–P #310 ANTI–SEIZE (VESUVIUS PART NO. 3AZ0000990) TO THE THREADS OF THE M24 HEX HEAD CAP SCREW SUPPLIED IN THE BOLT SET (ITEM 4). PLACE THE SCREW INTO THE STUD.

3. THE SCREW MUST BE SEATED AS FAR BACK AGAINST THE STUD AS POSSIBLE (SEE DETAIL D). IF THE SCREW IS NOT SEATED CORRECTLY, THE STUD CAN BE DAMAGED DURING THE TEST.

4. INSTALL THE WELDING TEST TOOL OVER THE STUD WITH THE SCREW M24 PASSING THROUGH THE 31MM DIAMETER HOLE IN THE WELDING TEST TOOL.

5. AFTER INSTALLING THE WELDING TEST TOOL, MAKE SURE THAT THE SCREW M24 IS SEATED FIRMLY AGAINST THE BACK OF THE STUD.

6. INSTALL THE SUPPLIED M24 HEX NUT. AVOID GETTING ANTI–SEIZE ON THE FACE OF THE NUT, OR WELDING TEST TOOL. HAND TIGHTEN THE M24 NUT. USING A TORQUE WRENCH, TIGHTEN THE M24 HEX NUT TO 500 NM. WAIT FOR 15 SECONDS. ②

7. LOOSEN AND REMOVE THE M24 HEX NUT.
REMOVE THE WELDING TEST TOOL AND THE M24 SCREW.

8. VISUALLY INSPECT THE WELD AND STUD FOR DEFORMATION AND/OR CRACKING.

9. PERFORM A DYE–PENETRANT, MAGNETIC PARTICLE, ULTRASONIC OR RADIOGRAPHIC TEST TO CHECK FOR CRACKING IN THE WELD AND STUD.

10. IF CRACKS ARE FOUND IN THE STUD OR IN THE WELDS, REMOVE THE STUD FROM THE LADLE BOTTOM RING AND WELD A NEW EXTERNAL STUD TO THE LADLE BOTTOM RING. REPEAT EXTERNAL MOUNTING BLOCK TEST PROCEDURE.

IT IS RECOMMENDED THAT A PERIODIC INSPECTION OF THE EXTERNAL STUD BLOCKS AND WELDS BE PERFORMED.

WELDING RECOMMENDATIONS :

ALL WELDING AND STRESS RELIEVING IS TO BE DONE PER AISE TECHNICAL REPORT NO. 9 AND ASME BOILER AND PRESSURE VESSEL CODE SECTION VIII, DIVISION 1.

ALL WELDINGS SHALL BE PERFORMED BY QUALIFIED WELDERS AND ALL WELDING DOCUMENTATION (WPS, PQR, WPQ, ETC.) SHALL BE PEPARED IN ACCORDANCE WITH APPROPRIATE STANDARDS.

ALL WELD SHALL BE INSPECTED BY A QUALIFIED WELD INSPECTOR.

WELD SIZE PER STATE OF THE ART (TYPICAL VALUE ON THIS DRAWING FOR REFERENCE ONLY). PREHEAT WELDING AREA TO 93°C TO 149°C [200°F TO 300°F]. USE STRAIGHT PASSES (DO NOT WAVE ELECTRODE) USE E70XX LOW HYDROGEN RODS OR EQUIVALENT. ALTERNATE PASSES SIDE TO SIDE ON THE MOUNT TO MINIMIZE STRESS AND DISTORTION.

Chamfer all corners

REF	MATERIAL	MAT.N°	QTY	DESCRIPTION
① 5	SUPPLY BY VESUVIUS	–	(1)	WELDING TEST TOOL (9E26520)
① 4	SUPPLY BY VESUVIUS	–	(1)	BOLT SET (9C57970)
3	SAE8620	1.6523	2	PIN
① 2	St 52.3	1.0570	4	STUD
1	A42CP	1.0425	1	PLATE

MATERIAL NAME	MATERIAL 1	MATERIAL 2	MATERIAL 3	MATERIAL 4
–				

NOMINAL DIMENSIONAL TOLERANCES UNLESS OTHERWISE SPECIFIED									
LINEAR									
UP TO	0	3	6	30	120	400	1000	2000	4000
TOLERANCE	±	0.10	0.10	0.20	0.30	0.50	0.80	1.20	2.00
RADIUS OR CHAMFER									
UP TO	0	3	6	30	120	10	50	120	400
TOLERANCE	±	0.20	0.50	1.00	2.00	1°	30'	20'	10'

DIMENSIONS ON FINISHED PART

SHEET	1 OF 1
1st ANGLE PROJECTION	
CODE	100489
STATE	RELEASED
SCALE	1/2
FORMAT	A0
DWG	396
UNITS: mm	
FINISH	
PROJECT	PR212004
MODEL	LG21
DRAWING #	9E25928
REV	3

TRACEABILITY PUR 34	
GENERAL	– Markings must be easily readable. – Mark Vesuvius logo + Supplier Initials ex: (DD)
MARK 1 DETAIL	– Part number + Revision (BB) – PO + initials of TTF (CC) + Machining PO number (XXXXXX)

VESUVIUS

© Copyright 2011 Vesuvius • All Rights Reserved

THIS DRAWING IS THE PROPERTY OF VESUVIUS AND CONTAINS CONFIDENTIAL AND PROPRIETARY INFORMATION. THE EQUIPMENT PURCHASER MAY USE THIS DRAWING ONLY FOR THE PURPOSE OF MAINTAINING THE EQUIPMENT PURCHASED FROM VESUVIUS. ANY COPYING OF THE DRAWING, OR ANY PART FROM MAINTENANCE, OR DISCLOSURE OF THIS DRAWING, OR THE INFORMATION THEREIN, WITHOUT THE WRITTEN PERMISSION OF VESUVIUS IS STRICTLY FORBIDDEN.

DRAWN	DRAWN DATE	APPROVED	APPROVED DATE
CCO	04/04/12	MAM	20/04/12

LADLE BOTTOM RING DIA660

REV.	DATE	DESCRIPTION	Checked
01	92/07/01	MODIFY ACCORDING TO DANIELI DRAWING	A.Alamdar

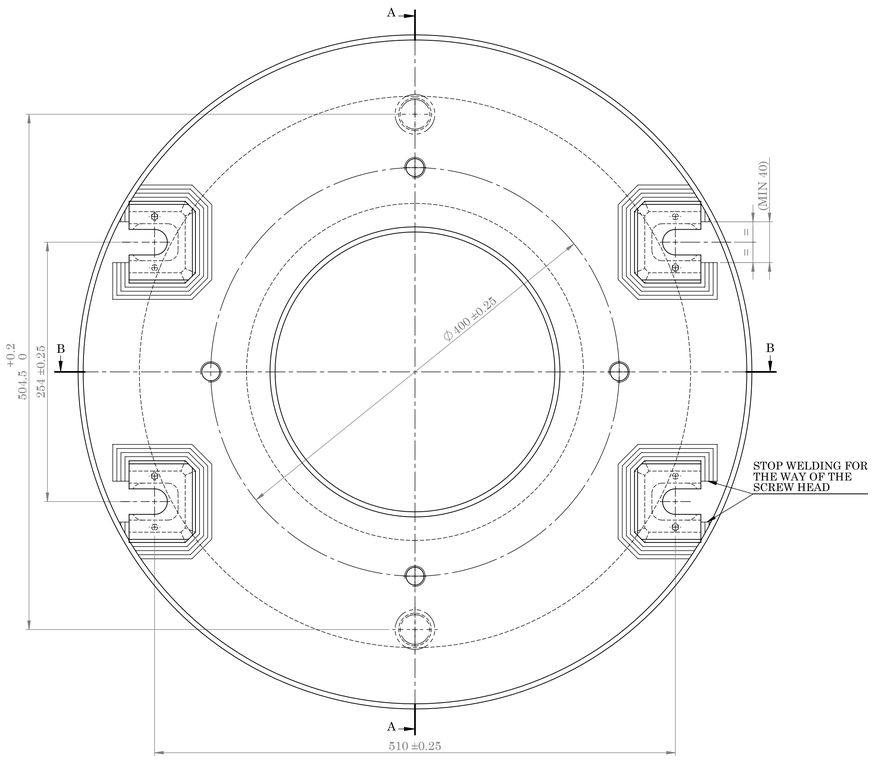

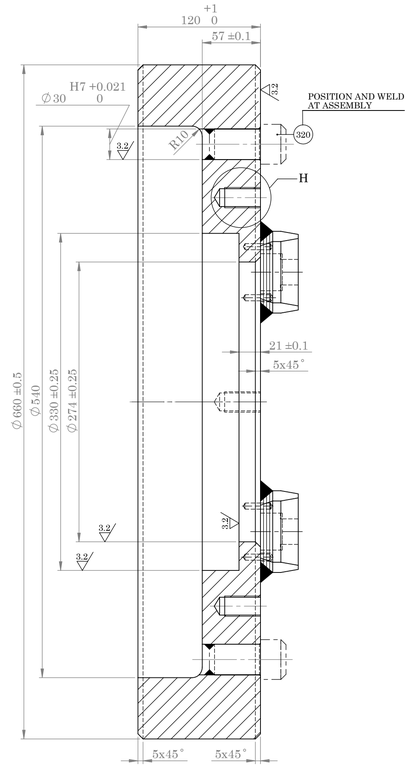

SECTION A-A
SCALE 1 : 3

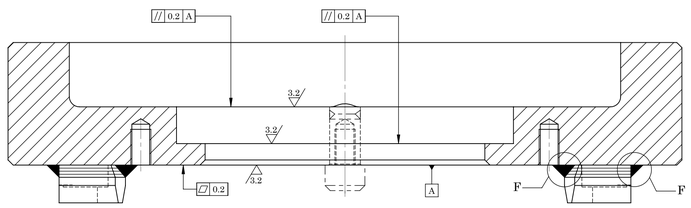

SECTION B-B
SCALE 1 : 3

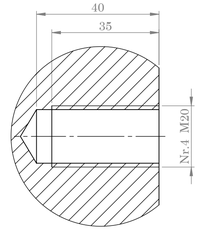

DETAIL H
SCALE 1 : 1

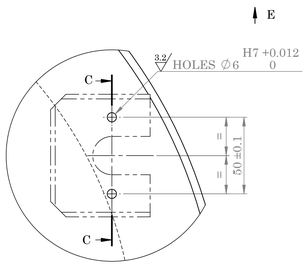

VIEW E
SCALE 1 : 2

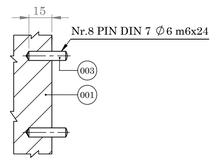

SECTION C-C
SCALE 1 : 2

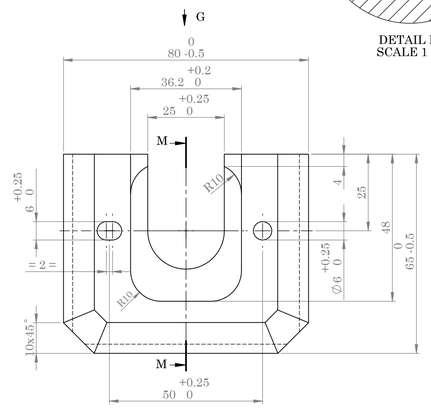

GENERAL TOLERANCE : ±0.25

PIECE No. 002
SCALE 1 : 1

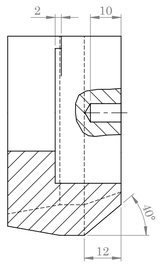

SECTION M-M
SCALE 1 : 1

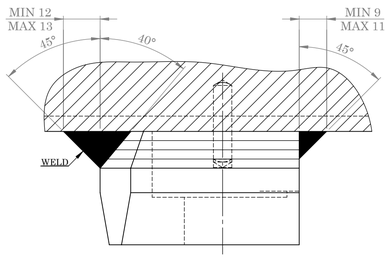

DETAIL F
SCALE 1 : 2

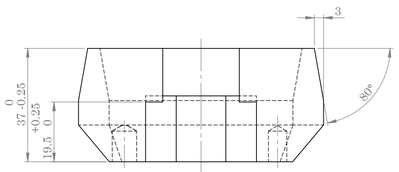

VIEW G
SCALE 1 : 1

DETAIL D

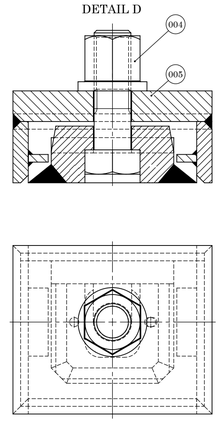

CHECK CONTACT BETWEEN THE STUD & THE WELDING TEST TOOL BEFORE SCREWING

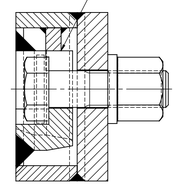

PROCEDURE FOR TESTING WELDS ON STUDS:

THIS PROCEDURE IS TO BE USED ON EACH OF THE FOUR STUDS ON EACH LADLE BOTTOM RING.

AFTER THE STUDS HAVE BEEN WELDED TO THE LADLE BOTTOM RING AND HAVE BEEN VISUALLY INSPECTED AND APPROVED BY A QUALIFIED WELD INSPECTOR, USE THE FOLLOWING PROCEDURE TO TEST FOR WELD STRENGHT.

1. CLEAN ALL DEBRIS FROM THE SURFACE OF THE LADLE BOTTOM RING AND WELDING TEST TOOL (ITEM 005) TO ENSURE THERE IS NOTHING THAT WILL KEEP THE TEST FIXTURE FROM RESTING SQUARELY ON THE LADLE BOTTOM RING.

2. APPLY A SMALL AMOUNT OF L-P #310 ANTI-SEIZE (VESUVIUS PART No.3AZ0000990) TO THE THREADS OF THE M24 HEX HEAD CAP SCREW SUPPLIED IN THE BOLT SET (ITEM 4).PLACE THE SCREW INTO THE STUD.

3. THE SCREW MUST BE SEATED AS FAR BACK AGAINST THE STUD AS POSSIBLE (SEE DETAIL D). IF THE SCREW IS NOT SEATED CORRECTLY, THE STUD CAN BE DAMAGED DURING THE TEST.

4. INSTALL THE WELDING TEST TOOL OVER THE STUD WITH THE SCREW M24 PASSING THROUGH THE 31mm DIAMETER HOLE IN THE WELDING TEST TOOL.

5. AFTER INSTALLING THE WELDING TEST TOOL, MAKE SURE THAT THE SCREW M24 IS SEATED FIRMLY AGAINST THE BACK OF THE STUD.

6. INSTALL THE SUPPLIED M24 HEX NUT. AVOID GETTING ANTI-SEIZE ON THE FACE OF THE NUT, OR WELDING TEST TOOL. HAND TIGHTEN THE M24 NUT. USING A TORQUE WRENCH, TIGHTEN THE M24 HEX NUT TO 500NM. WAIT FOR 15 SECONDS.

7. LOOSEN AND REMOVE THE M24 HEX NUT. REMOVE THE WELDING TEST TOOL AND THE M24 SCREW.

8. VISUALLY INSPECT THE WELD AND STUD FOR DEFORMATION AND/OR CRACKING.

9. PERFORM A DYE-PENETRANT, MAGNETIC PARTICLE, ULTRASONIC OR RADIOGRAPHIC TEST TO CHECK FOR CRACKING IN THE WELD AND STUD.

10. IF CRACKS ARE FOUND IN THE STUD OR IN THE WELDS, REMOVE THE STUD FROM THE LADLE BOTTOM RING AND WELD A NEW EXTERNAL STUD TO THE LADLE BOTTOM RING. REPEAT EXTERNAL MOUNTING BLOCK TEST PROCEDURE.

IT IS RECOMMENDED THAT A PERIODIC INSPECTION OF THE EXTERNAL STUD BLOCKS AND WELDS BE PERFORMED.

WELDING RECOMMENDATIONS:

ALL WELDING AND STRESS RELIEVING IS TO BE DONE PER AISE TECHNICAL REPORT No.9 AND ASME BOILER AND PRESSURE VESSEL CODE SECTION VIII, DIVISION 1.

ALL WELDINGS SHALL BE PERFORMED BY QUALIFIED WELDERS AND ALL WELDING DOCUMENTATION (WPS, PQR, WPQ, ETC.) SHALL PREPARED IN ACCORDANCE WITH APPROPRIATE STANDARDS.

ALL WELD SHALL BE INSPECTED BY A QUALIFIED WELD INSPECTOR.

WELD SIZE PER STATE OF THE ART (TYPICAL VALUE ON THIS DRAWING FOR REFERENCE ONLY). PREHEAT WELDING AREA TO 93° C TO 149° C [200° F TO 300° F]. USE STRAIGHT PASSES (DO NOT WAVE ELECTRONIC) USE E70XX LOW HYDROGEN RODS OR EQUIVALENT. ALTERNATE PASSES SIDE TO SIDE ON THE MOUNT TO MINIMIZE STRESS AND DISTORTION.

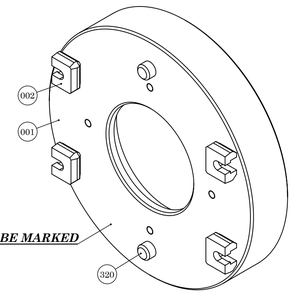

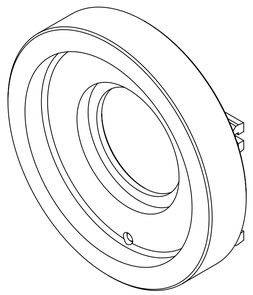

UNLESS OTHERWISE WELDING

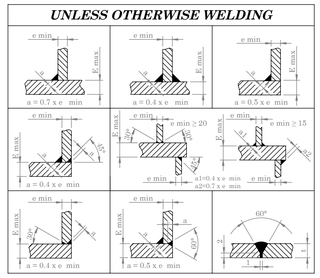

6.3 3.2 ( ) ***All sharp edge chamfer : 0.5x45°***

POS.	QTY.	DESCRIPTION	MATERIAL	UNIT MASS (kg)	TOTAL MASS (kg)	CODE No.	REMARK
005	(1)	WELDING TEST TOOL	-	-	-	-	-
004	(1)	BOLT SET	-	-	-	-	-
003	08	PARALLEL PIN DIN7-Ø6 m6x28	STAINLESS STEEL	0.006	0.048	STD	ISO 2338
002	04	STUD (80x65x37)	ST 52-3 (1.0570)	1.2	4.8	-	-
001	01	PLATE (D:660,d:274,T:120)	H II DIN 17155 (1.0425)	175.2	175.2	-	-
320	02	PIN	20NiCrMo2-2 (1.6523)	0.560	1.12	3023010192	BF50233.4
319	01	ASSEMBLY	-	180	180	3040140018	BF50233.3

NOTE:

Dimension without tolerance follow:
ISO 2768-MK

	NAME	DATE
DES.		
DRA.	M.Mirjalili	91/03/03
CHK.	A.Alamdar	92/07/01
APPR.	A.Alamdar	92/07/01

TITLE:

PLANT UNIT 03
BASE PLATE
MODEL : LG21

IRAN ALLOY STEEL CO

ORDER.	RF6/7.B3	REF.DRAW	***SD1203M2901001319***	REV
CODE No.	3040140018	DWG No.	***FD1203M2901001319***	01
QCTM No.	BF50233.3	SCALE: 1 : 3	SIZE: A1	SHEET: 1 OF 1

REV.	DATE	DESCRIPTION	Chacked
01	92/07/01	MODIFY ACCORDING TO DANIELI DRAWING	A.Alamdar

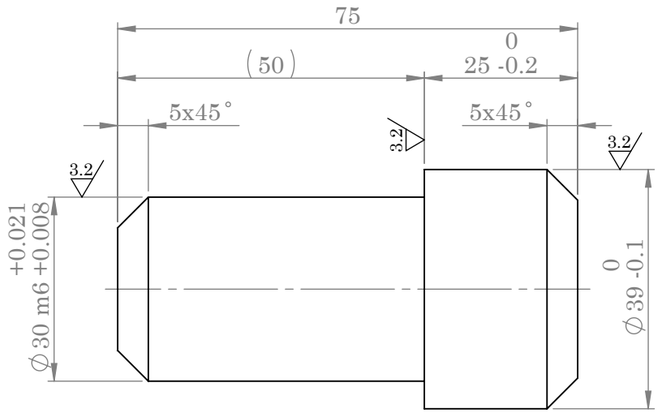

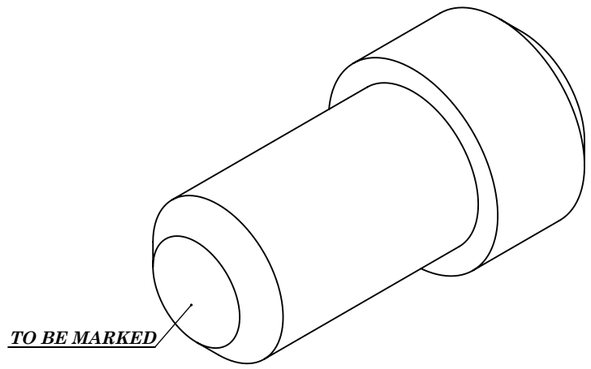

6.3 (3.2)

POS	QTY	DESCRIPTION	MATERIAL	UNIT MASS (kg)	TOTAL MASS (kg)	DANIELI CODE	ASSY . CODE
320	02	ROD ∅39x75	20NiCrMo2-2 (1.6523)	0.560	0.560	-	-

NOTE:

Dimension without tolerance follow:
ISO 2768-M

	NAME	DATE
DES.		
DRA.	A.Alamdar	92/03/03
CHK.	A.Alamdar	92/03/04
APPR.	M.Minjalili	92/03/04

TITLE:

PLANT UNIT 03
PIN FOR BASE PLATE

Afrab Pazhoh Co. Prod.

IRAN ALLOY STEEL CO

ORDER.	RF6/7.B4	REF.DRAW	***SD1203M2901001320*** REV
CODE No.	3023010192	DWG No.	***FD1203M2901001320*** 01
QCTM No.	BF50233.4	SCALE: 1 : 1	SIZE: A3 SHEET: 1 OF 1

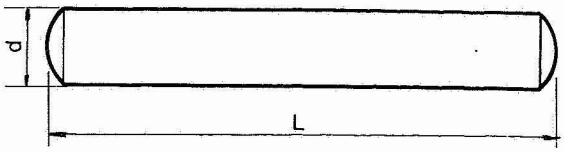

Dowel pin, ground

Tolerance ISA m6*

Steel, cold drawn

DIN 7
ISO 2338

Designation:
dowel pin, ground, ∅ 4 mm and 20 mm total length L, tolerance m6 = DIN 7 m6 × 20.

d	2	2,5	3	4	5	6	8	10	12	14	16	20
L mm	Weights in kg per 1000 pieces											
6	0,155	0,243	0,355	0,64	1,02	1,53						
8	0,203	0,320	0,466	0,84	1,33	1,97	3,58					
10	0,253	0,397	0,577	1,04	1,64	2,41	4,37	7,01	10,2			
12	0,302	0,474	0,688	1,23	1,95	2,85	5,16	8,24	12,0			
14	0,351	0,550	0,799	1,44	2,26	3,29	5,95	9,47	13,8	19,0		
16	0,401	0,627	0,910	1,63	2,57	3,73	6,74	10,7	15,6	21,4	28,3	
18	0,451	0,705	1,02	1,83	2,88	4,17	7,53	11,9	17,4	23,8	31,5	
20	0,500	0,782	1,13	2,03	3,19	4,61	8,31	13,2	19,2	26,2	34,7	56,4
24		0,937	1,35	2,43	3,80	5,50	9,89	15,6	22,8	31,0	41,1	66,2
28			1,57	2,82	4,42	6,40	11,5	18,0	26,4	35,8	47,5	76,0
32			1,79	3,21	5,03	7,30	13,0	20,6	30,0	40,6	53,9	85,8
36				3,60	5,65	8,19	14,6	23,1	33,6	45,4	60,3	95,6
40				4,00	6,27	9,08	16,2	25,5	37,2	50,2	66,6	105
45					7,03	10,2	18,1	28,6	41,7	56,2	74,5	118
50					7,80	11,3	20,1	31,7	46,2	62,3	82,5	130
55						12,4	22,1	34,8	50,7	68,3	90,4	142
60						13,5	24,0	37,9	55,2	74,4	98,4	155
70							28	44,1	64,1	86,5	114	179
80							32	50,3	73,0	98,6	130	204
90								56,5	82,1	111	146	228
100								62,7	91,0	123	161	253
120									109	147	192	302
140										171	224	351
160										195	256	400
Packaging	200	100				50		25				

* Values of tolerance m6: see page 358.

Execution:
tolerance m6 - outside surface = R_z 4
both ends = R_z 63
and DIN 267/1

مرکز اسناد فنی
کنترل شد
تاریخ: ۹۱/۲/۴
شرکت فولاد آلیاژی ایران
ورود به دفتر اسناد فنی
شماره: ۱۴۲۵
تاریخ: ۹۱/۲/۴

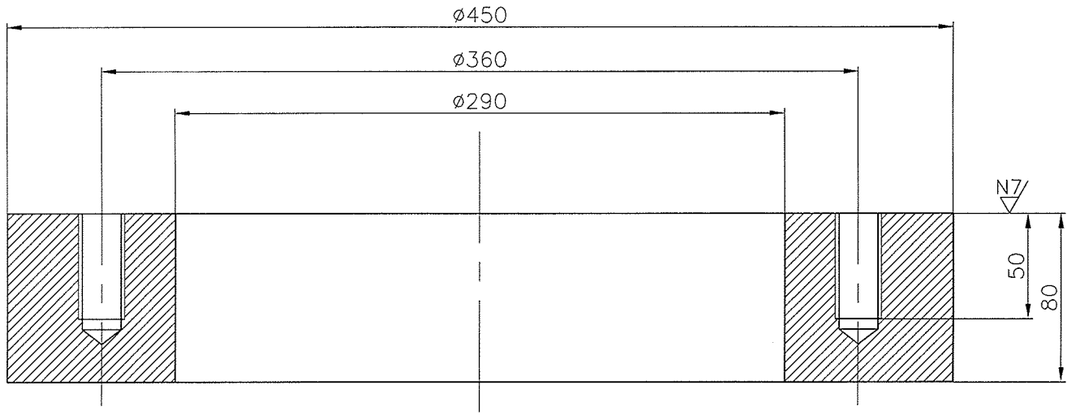

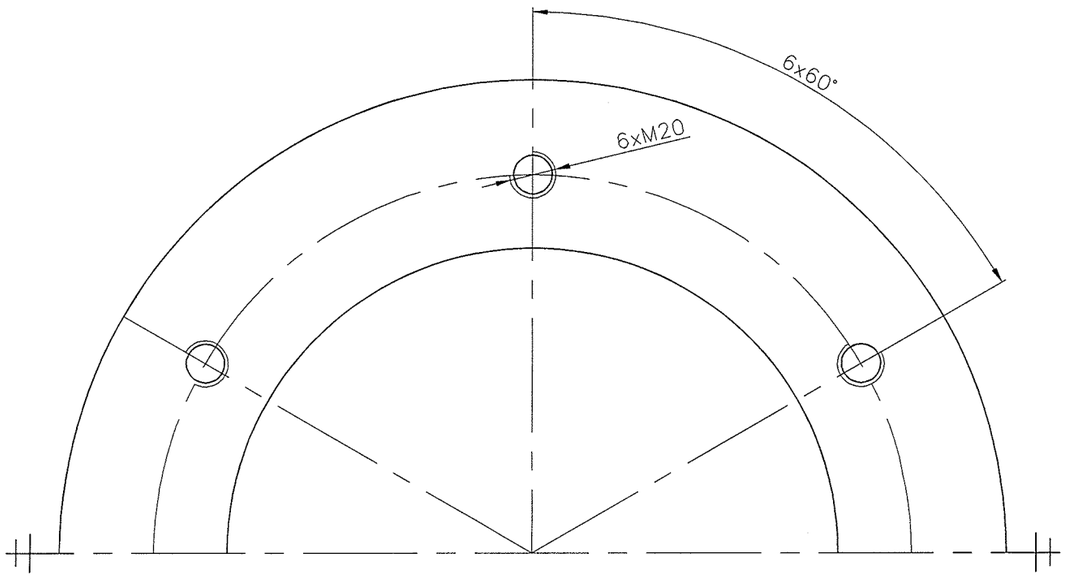

N8 (N7)

All edges Chamfer 1x45°

REV. تغییرات	DATE تاریخ	DESCRIPTION– شرح	Design طراح	Drawn ترسیم‌کننده	Checked بازرس	Approved تاییدکننده
1	91.1.29	تهیه نقشه		فضیلتی	ضیا ئیان	مجید چاکری

REVISIONS–تغییرات

IRAN ALLOY STEEL CO.
شرکت فولادآلیاژی ایران

NOTE: DIMENSION WITHOUT TOLERANCE ACC. TO DIN–ISO 2768mk

DAMCODE: کددانیلی:

WAREHOUSE CODE: کدانبار: 3 0 0 9 0 2 0 0 1 9

فایل کامپیوتری کمکی
COMPUTER AIDED FILE:

Material: جنس : St44–2

TITLE: عنوان نقشه:

رینگ پاتیل مخصوص نصب فلانج

POROUS PLUG

Heat Treatment: عملیات حرارتی:

Scale: مقیاس:	Date: تاریخ:	Size: سایز:
0:0	91.1.29	A3
	Mass(kg): وزن: ———	Sheet: صفحه: 1/1

DRAWING NO: شماره نقشه: ND1103T2901200321

Rev. تغییرات: 01

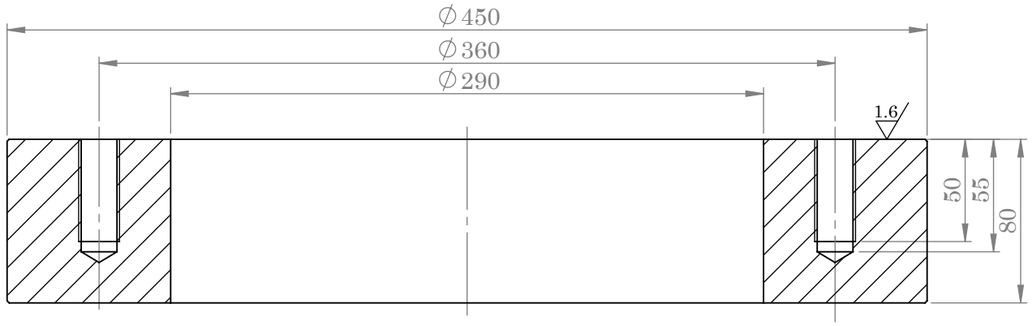

SECTION A-A

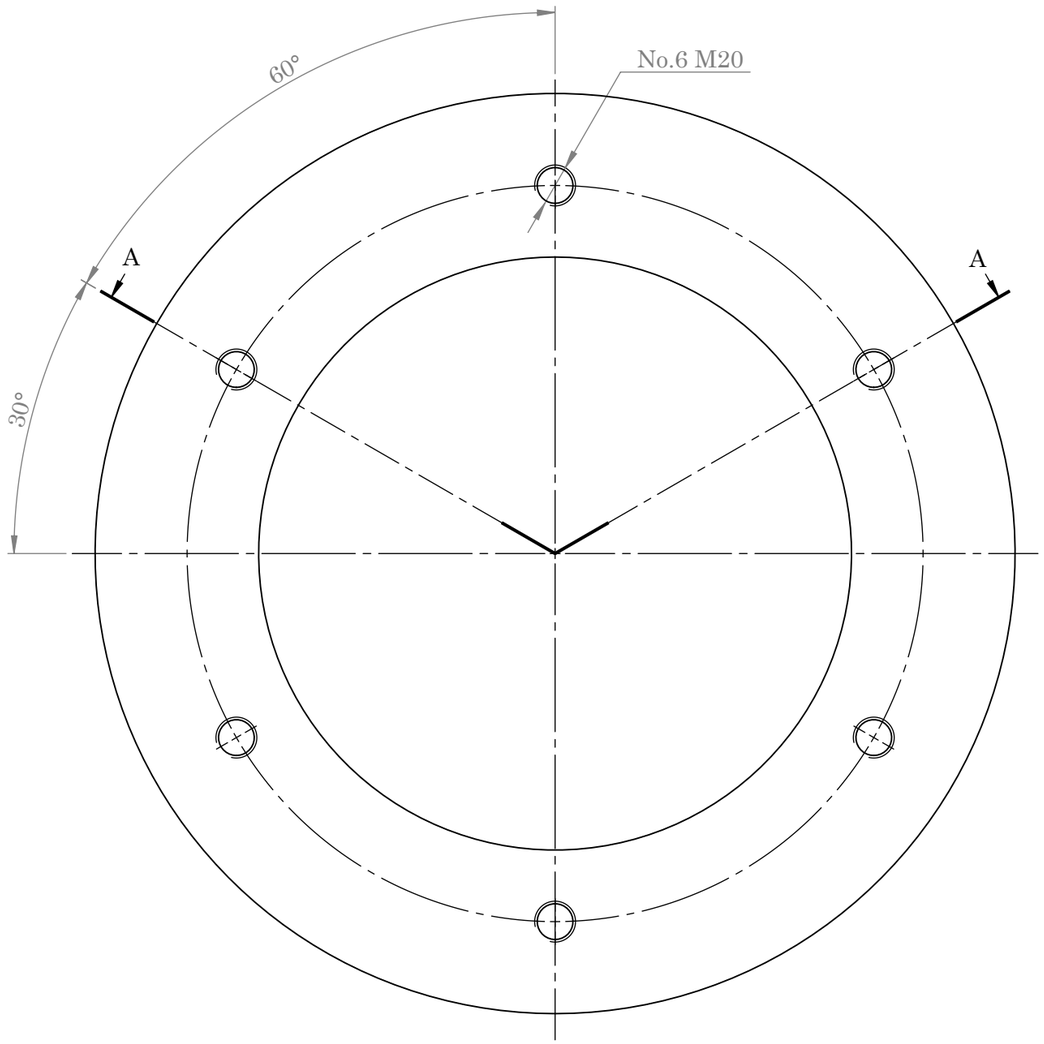

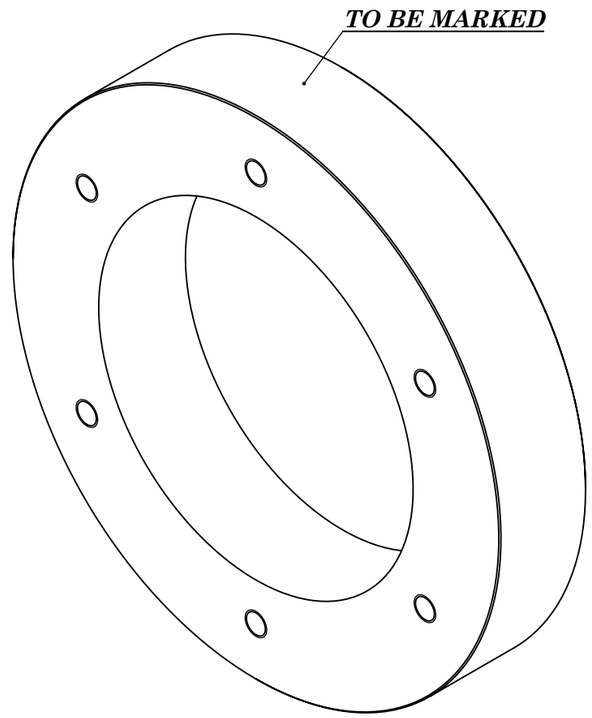

All edges chamfer = 1x45° 3.2 (1.6)

POS	QTY	DESCRIPTION	MATERIAL	UNIT MASS (kg)	TOTAL MASS (kg)	DANIELI CODE	ASSY . CODE
321	01	PL ∅450x80	ST 44-2	58	58	-	-

NOTE:
Dimension without tolerance follow:
ISO 2768-M
MATERIAL :
ST 44-2 DIN 17100

	NAME	DATE
DES.		
DRA.	M.H.Fesahat	92/02/21
CHK.	A.Alamdar	92/02/23
APPR.	M.Minjalili	92/02/25

TITLE:
PLANT UNIT 03
POROUS PLUG

Arak Petrochemical Co. PJSC

IRAN ALLOY STEEL CO

ORDER.	RF6/4.C13	REF.DRAW	***ND1103T2901200321*** REV
CODE No.	3009020019	DWG No.	***FD1103T2901200321*** 00
QCTM No.	BF50230.13	SCALE: 1 : 3	SIZE: A3 SHEET: 1 OF 1

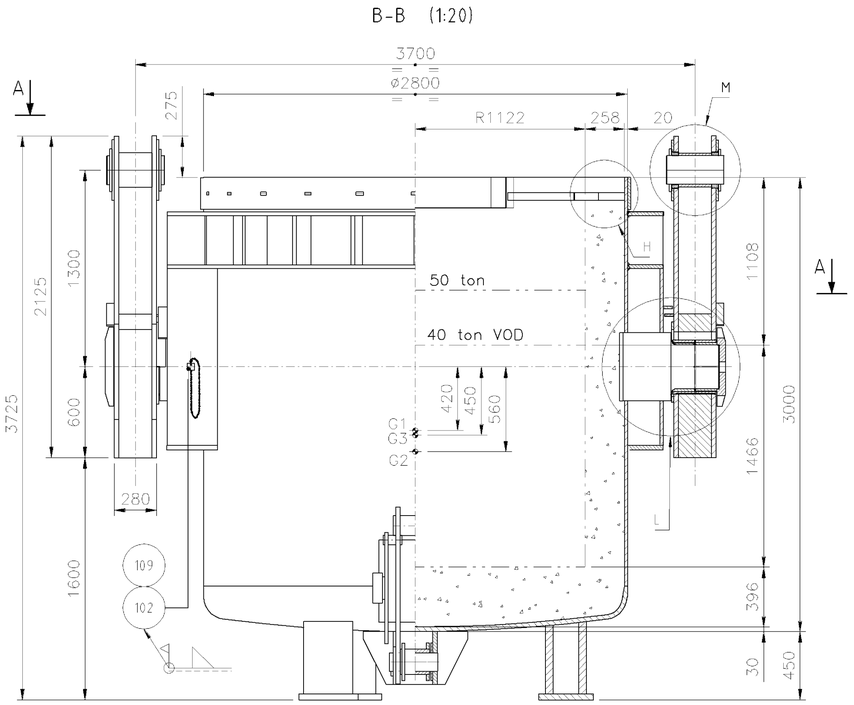

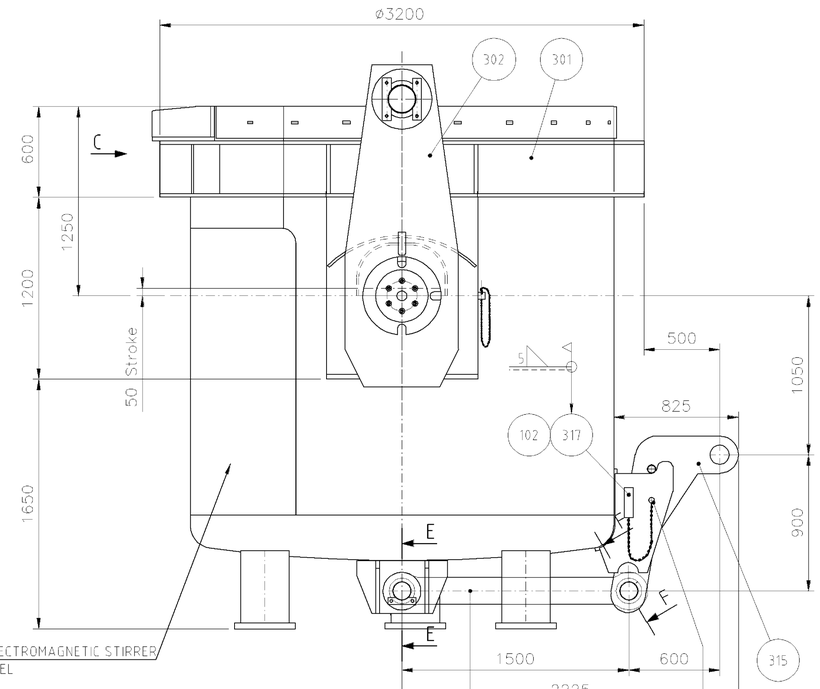

LADLE SHEEL PLATE IN FRONT OF ELECTROMAGNETIC STIRRER
MACHINE MUST BE IN STAINLESS STEEL

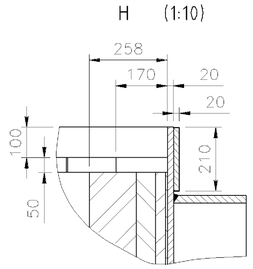

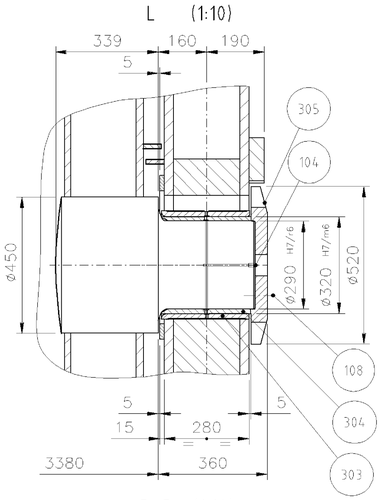

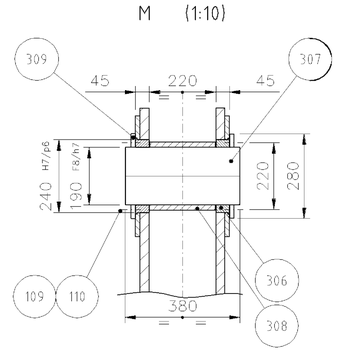

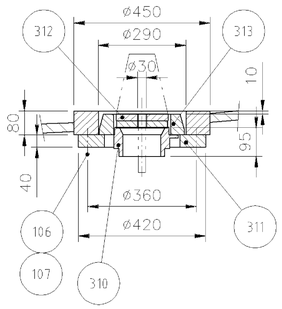

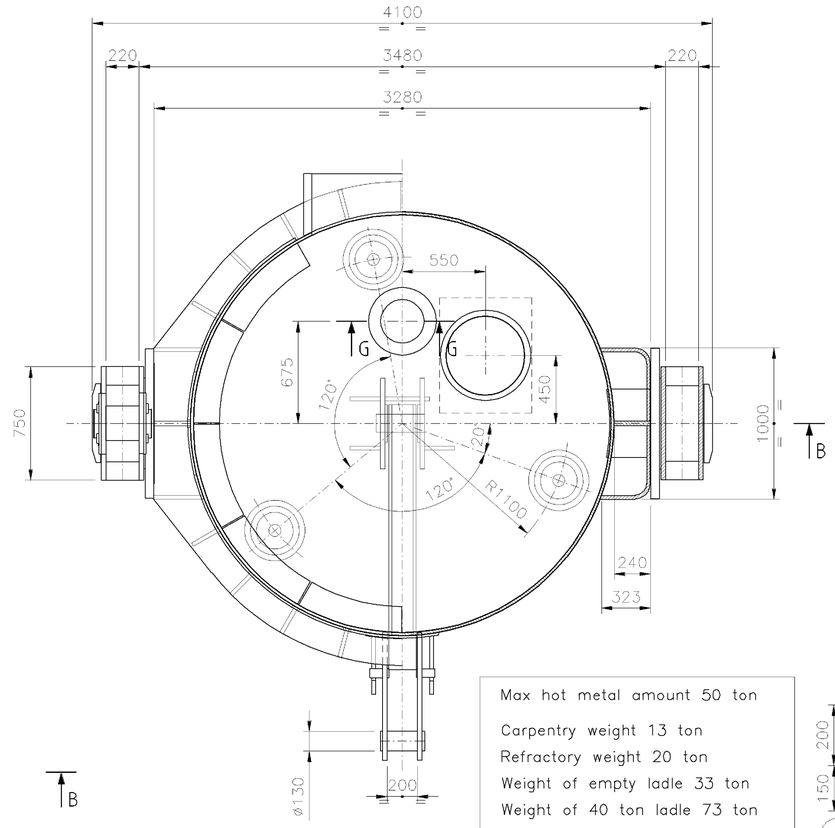

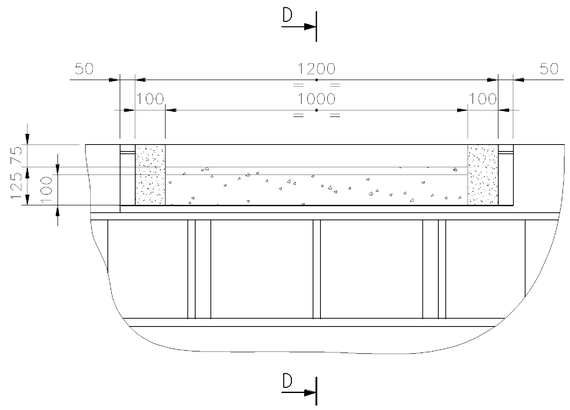

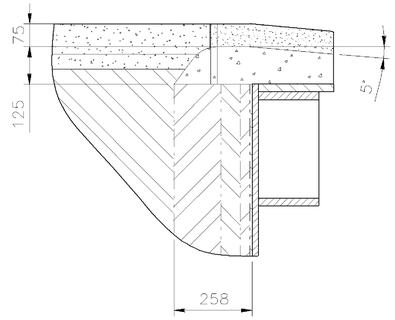

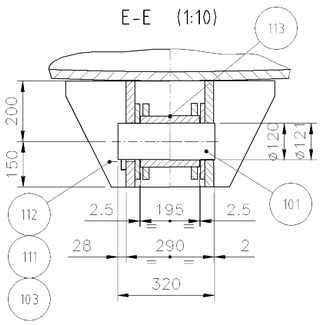

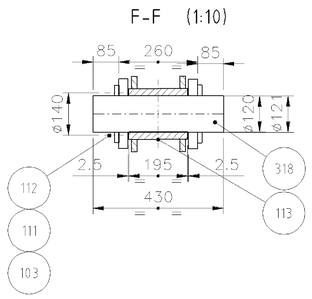

Max hot metal amount 50 ton

Carpentry weight 13 ton
Refractory weight 20 ton
Weight of empty ladle 33 ton
Weight of 40 ton ladle 73 ton

G1 Centre of gravity empty ladle
G2 Centre of gravity 40 ton ladle
G3 Centre of gravity 50 ton ladle

SALDATURE A NORMA DANIELI STD 2.8.006
WELDS AS PER DANIELI STD 2.8.006

SALDATURE DA ESEGUIRE IN CANTIERE
WELDS TO BE DONE ON SITE

SALDATURE DA ESEGUIRE AL MONTAGGIO
WELDS TO BE DONE ON WORKSHOP

DOVE NON INDICATO A = 0.7 DELLO SPESSORE MINIMO DA COLLEGARE
WHERE NOT INDICATED A = 0.7 OF MINIMUM THICKNESS TO BE WELDED
CLASSE : B
CLASS :

Rev.	Date	Revisions description	Drawn by	Checked by	Approved by
05	16 Feb 2012	ELIMINATI ITEMS 319-320 ITEMS 319-320 DELETED	Basiricò M	Basiricò M	Terliche S
04	14 Nov 2011	MODIFICATO DOVE INDICATO REVISED WHERE INDICATED	Basiricò M	Basiricò M	Terliche S
03	12 Sep 2011	MODIFICATO DOVE INDICATO REVISED WHERE INDICATED	Basiricò M	Basiricò M	Terliche S
02	16 Mar 2011	MODIF. DOVE INDICATO IN ACCORDO A IAS/DAB/E0621 REVISED WHERE INDICATED ACCORDING TO IAS/DAB/E0621	Basiricò M	Basiricò M	Terliche S
01	9 Mar 2011	REVISIONE GENERALE GENERAL REVISION	Basiricò M	Basiricò M	Terliche S
00	28 Gen 2011	EMESSO PER INFORMAZIONE ISSUED FOR INFORMATION	Basiricò M	Basiricò M	Terliche S

IASCO
IRAN ALLOY STEEL CO.
YAZD - IRAN

Consultant from customer

APPROVED
(Stamp)

Danieli & C.Off. Mecc. S.p.A.
CONSORTIUM
MTS

Project Name: KOSAR PROJECT

IASCO Drawing/Document number: SD1203T2901001
REVISION: 02

DANIELI CENTRO MET

Job nr
Obtained from
Replaces

Family code/Machine code: SDC040 C B N
Weight (Kg): 13375
J (Kgm²)

Title: IASCO LADLE 40 TON VOD

Scale: 1:20
Format: A1
Nr. of sheets: 001
Sheet: 001
Follow

DANIELI Shop number
Revision

DANIELI dwg number: DP03RF-GA01-M1901-BD001
Revision: 05

According to law DANIELI & C. SpA considers this document to be a company secret and therefore prohibits any person to reproduce or disclose it or make it known in whole or in part to other parties or to competitors without specific written authorization of DANIELI's Management.

File nr: DP03RF-GA01-M1901-BD001 A030 DP03RF074654

857604 DP03RF074654 A030 DP03RF074654 857604

COMPUTER AIDED DESIGN -A

VOID

AS BUILT

According to law Danieli&C. considers this document to be a company secret and therefore prohibits any person to reproduce it or make it known in whole or in part to other parties or to competitors without specific written authorization of Danieli's Management

DANIELI

PERNI LISCI CON SCANALATURA PER PIASTRINA
PLAIN PINS WITH GROOVE FOR LOCKING PLATE

PERNI LISCI CON SCANALATURA PER PIASTRINA - FORO PER INGRASSATORE ALL' ESTREMITA'
PLAIN PINS WITH GROOVE FOR LOCKING PLATE - END GREASE HOLE

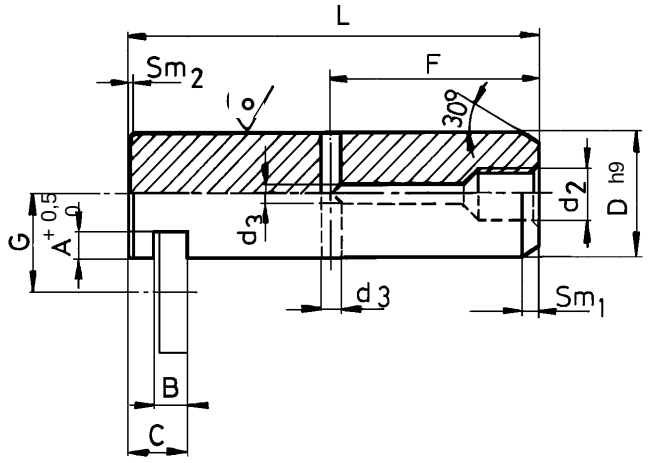

Mat.: Traf. h9 UNI 10233
C 40 EN 10083 Normalizzato
Filettatura: ISO 7/1

Mat.: Drawn h9 UNI 10233
C 40 EN 10083 Normalized
Thread: ISO 7/1

Per piastrine vedere N 7.100.127
For fitting plates see N 7.100.127

$$F = \frac{L - C}{2}$$

D h9	70	80	90	100	110	120	130	140	150
A	10	12	13	14	15	18	20	20	22
B	10,5	10,5	10,5	10,5	16	16	16	16	16
C	20	20	20	20	28	28	28	28	28
d_2	1/4" x 15	1/4" x 15	1/4" x 15	1/4" x 15	1/4" x 15	1/4" x 15	1/4" x 15	1/4" x 15	1/4" x 15
d_3	6	6	6	6	6	6	6	6	6
G	45	48	52	56	65	67	72	75	78
sm_1	4	4	4	4	4	4	4	4	4
sm_2	3	3	3	3	3	3	3	3	3
Mass Kg/m	30,2	39,5	49,9	61,6	74,6	88,8	104	121	139
Piastrina - Plate	4	4	4	4	5	5	5	5	5

Lunghezza - Length L	CODICE CODE								
90	0.008412.G	-	-	-	-	-	-	-	-
100	0.008413.A	0.008423.C	-	-	-	-	-	-	-
110	0.008414.B	0.008424.D	-	-	-	-	-	-	-
120	0.008415.C	0.008425.E	0.008434.F	-	-	-	-	-	-
130	0.008416.D	0.008426.F	0.008435.G	-	-	-	-	-	-
140	0.008417.E	0.008427.G	0.008436.A	0.008444.Q	0.008453.H	-	-	-	-
160	0.008418.N	0.008428.Q	0.008437.B	0.008445.H	0.008454.K	-	-	-	-
180	0.008419.P	0.008429.H	0.008438.K	0.008446.K	0.008455.L	0.008463.L	-	-	-
200	0.008420.M	0.008430.P	0.008439.L	0.008447.L	0.008456.M	0.008464.M	0.008472.M	0.008481.E	-
220	0.008421.A	0.008431.C	0.008440.Z	0.008448.R	0.008457.N	0.008465.N	0.008473.N	0.008482.F	0.008491.G
240	0.008422.B	0.008432.D	0.008441.M	0.008449.V	0.008458.W	0.008466.P	0.008474.P	0.008483.G	0.008492.A
260	-	0.008433.E	0.008442.N	0.008450.T	0.008459.X	0.008467.Q	0.008475.Q	0.008484.A	0.008493.B
280	-	-	0.008443.P	0.008451.P	0.008460.V	0.008468.Z	0.008476.H	0.008485.B	0.008494.C
300	-	-	-	0.008452.Q	0.008461.H	0.008469.S	0.008477.K	0.008486.C	0.008495.D
320	-	-	-	-	0.008462.K	0.008470.X	0.008478.T	0.008487.D	0.008496.E
340	-	-	-	-	-	0.008471.L	0.008479.R	0.008488.M	0.008497.F
360	-	-	-	-	-	-	0.008480.H	0.008489.N	0.008498.P
380	-	-	-	-	-	-	-	0.008490.L	0.008499.Q
400	-	-	-	-	-	-	-	-	0.008500.W

Descrizione - Description
Date
Rev.

According to law Danieli&C. considers this document to be a company secret and therefore prohibits any person to reproduce it or make it known in whole or in part to other parties or to competitors without specific written authorization of Danieli's Management

CATENE DIN 5685 TIPO G
CHAINS DIN 5685 TYPE G

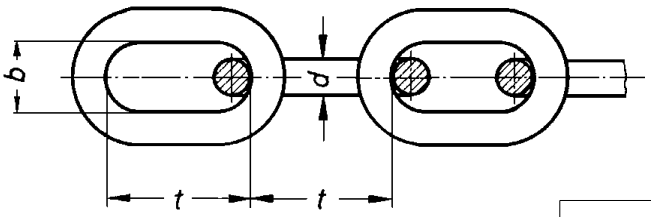

Materiale: acciaio zincato DIN 17115

Catene senza requisiti di qualità, non testate; non utilizzabili per sollevamento di carichi

Material: galvanized steel DIN 17115

Chains without quality requirements, not tested; to avoid for lifting loads

d	t	b	Carico Load max kN	Massa Mass Kg/m	CODICE CODE
2	12	3,6	0,2	0,07	0.070126.D
2,5	14	4,5	0,32	0,11	0.070127.E
3	16	5,4	0,45	0,16	0.070128.N
4	32	7,2	0,8	0,27	0.070131.A
5	35	9	1,25	0,43	0.070132.B
6	42	10,8	1,6	0,63	0.070133.C
7	49	12,6	2,5	0,86	0.070134.D
8	52	14,4	3,2	1,1	0.070135.E
10	65	18	5	1,75	0.070136.F
12	78	21,6	7,1	2,55	0.070137.G
13	82	23,4	8	2,95	0.070138.Q

Es. di design.:
0.070131.A Catena G4x32 DIN 5685
zincate

Ex. of design.:
0.070131.A Chain G4x32 DIN 5685
galvanized

GRILLI DIN 82101 FORMA A
SHACKLES DIN 82101 FORM A

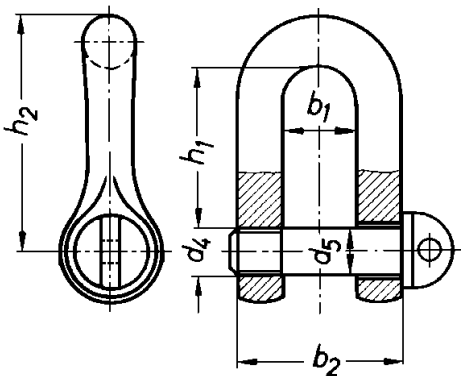

Materiale: RSt 42.2 DIN 17100
Zincatura: gal Zn 40 DIN 50960
Condiz. di fornitura: N 2.8.007

Material: RSt 42.2 DIN 17100
Galvanizing: gal Zn 40 DIN 50960
Cond. of supply: N 2.8.007

Es. di design.:
0.058904.Q Grillo A3 DIN 82101
zincato

Ex. of design.:
0.058904.Q Shackle A3 DIN 82101
galvanized

Dim. nom.	b_1	b_2	d_2	d_4	d_5	h_1	h_2	Carico Load max kN	Massa Mass Kg	CODICE CODE
0,16	8	18	6	M 6	6	18	27	1,6	0,024	0.070139.H
0,25	11	25	8	M 8	8	24	36	2,5	0,045	0.070140.W
0,4	14	30	10	M 10	10	30	45	4	0,09	0.070141.K
0,6	17	37	12	M 12	12	36	54	6,3	0,17	0.070142.L
1	21	47	15	M 16	16	49	72	10	0,36	0.059157.L
1,6	27	61	19	M 20	20	61	90	16	0,75	0.070143.M
2	30	68	21	M 22	22	67	99	20	1	0.070144.N
2,5	33	75	23	M 24	24	73	108	25	1,32	0.070145.P
3	38	86	26	M 27	27	83,5	123	31,5	1,8	0.058904.Q
4	42	96	29	M 30	30	91	135	40	2,4	0.070146.Q
5	47	107	33	M 36	36	111	162	50	3,9	0.070147.H
6	53	121	37	M 39	39	119,5	176	63	5,3	0.070148.S
8	60	136	41	M 45	45	139,5	203	80	7,9	0.070149.T
10	66	150	45	M 48	48	147	216	100	10	0.070150.Z
12	73	167	50	M 52	52	158	234	125	13	0.069235.L
16	81	185	55	M 60	60	185	270	160	18,5	0.070152.N
20	90	206	61	M 68	68	211	306	200	27,2	0.070153.P

PIASTRINE DI BLOCCAGGIO PERNI PER BUSSOLE E SNODI SFERICI
FITTING PLATES FOR BUSHES AND BALL JOINT PINS

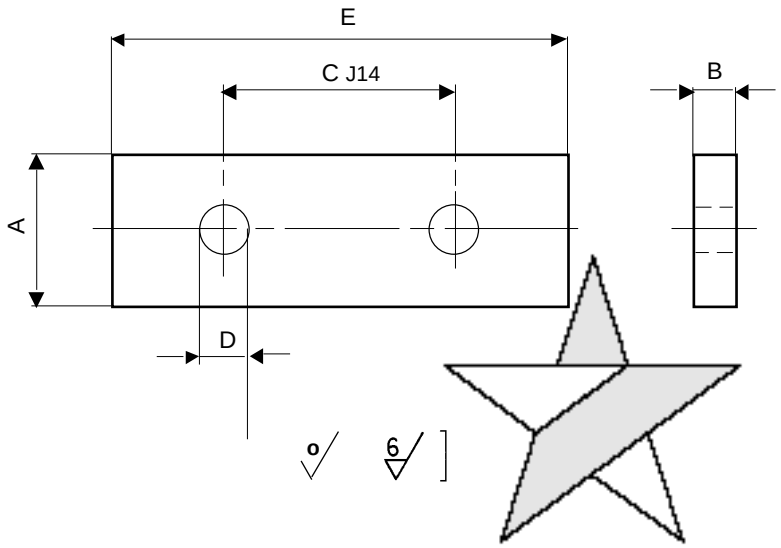

Material: S 275JR EN 10025 02

Es. di design.:
0.005082.X Piastrina blocc. perni T.2
80x25x5
02 S 275JR EN 10025
N 7.100.127

Ex. of design.:
0.005082.X Plate for fitting pin T.2
80x25x5
02 *S 275JR EN 10025*
N 7.100.127

Dimensioni in mm
Dimensions in mm

Tipo *Type*	**A**	**B**	**C** **J 14**	**D**	**E**	**Mass** **kg**	**CODICE** ***CODE***
1	20	5	36	9	60	0,04	0.005081.W
2	25	5	50	11	80	0,07	0.005082.X
3	30	10	70	14	100	0,22	0.005083.Z
02 4	40	10	100	18	140	0,40	0.005084.S
02 5	50	15	140	22	190	1,00	0.005085.T

According to law Danieli&C. considers this document to be a company secret and therefore prohibits any person to reproduce it or make it known in whole or in part to other parties or to competitors without specific written authorization of Danieli's Management

INGRASSATORE UNI 7662 - FORMA B
GREASE NIPPLE UNI 7662 - TYPE B

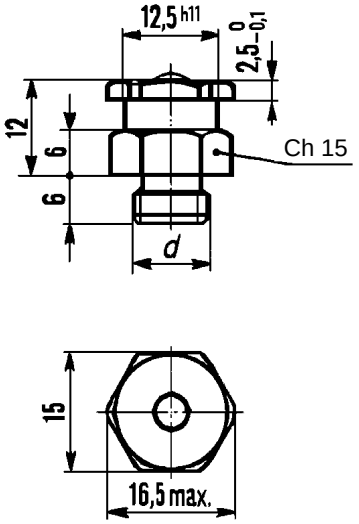

Materiale: Acciaio zincato
Filettatura: ISO 228/1

Material: Zinc coated C steel
Thread: ISO 228/1

Es. di design.:
0.002792.G Ingrassatore B 1/4" ISO 228/1
Acciaio zincato UNI 7662

Ex. of design.:
0.002792.G Grease nipple B 1/4" ISO 228/1
Zinc coated C steel UNI 7662

Sconsigliato
Not recommended

d	CODICE CODE
1/8"	0.002791.F
1/4"	0.002792.G

INGRASSATORE DÜRKOPP A PRESSIONE
DÜRKOPP FITTING GREASE NIPPLES

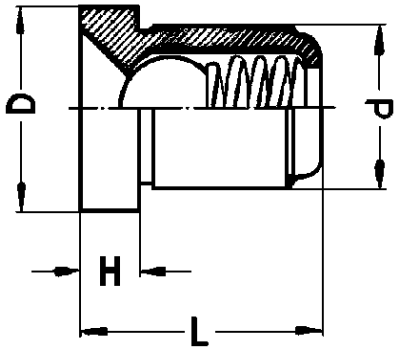

Materiale: Acciaio zincato

Material: Zinc coated C steel

Es. di design.:
0.002794.B Ingrassatore Dürkopp VENN 8
Acciaio zincato

Ex. of design.:
0.002794.B Dürkopp Grease nipple VENN 8
Zinc coated C steel

Sigla Tag	d	D	L	H	CODICE CODE
VENN 6	6	8	9	2	0.002793.A
VENN 8	8	10	12	3	0.002794.B

Rev	Date	Descrizione - Description

COPIGLIE UNI 1336 - SPLIT PINS (ISO 1234)

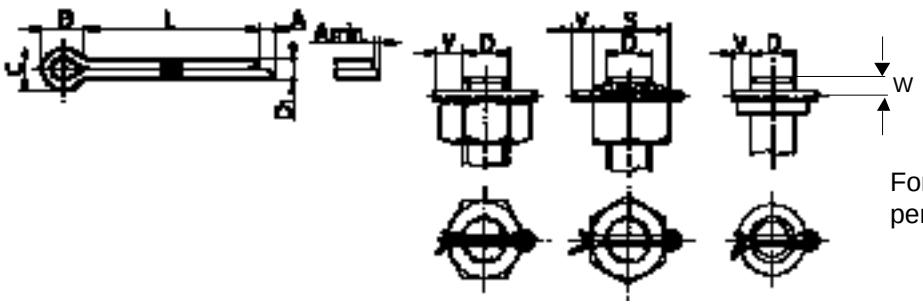

For - hole:
per Ø ≤ 2,5 = H12
> 2,5 ≤ 10 = H13
> 10 = H14

* D nominale copiglia é, per convenzione, il relativo Ø del foro passante
The split pin rated dia. is conventionally the Dia. od thru hole

Mat. secondo prescrizioni UNI 1337 (as per UNI 1337 prescriptions)

Es. di design.: 0.001497.Z Copiglia 5x40 UNI 1336 (Split pin)

	D nom.*	1,6	2	2,5	3,2	4	5	6,3	8	10
	D_1 max	1,4	1,8	2,3	2,9	3,7	4,6	5,9	7,5	9,5
	min	1,3	1,7	2,1	2,7	3,5	4,4	5,7	7,3	9,3
	A max	2,5	2,5	2,5	3,2	4	4	4	4	6,3
	B ≈	3,2	4	5	6,4	8	10	12,6	16	20
	C min	2,4	3,2	4	5,1	6,5	8	10,3	13,1	16,6
	max	2,8	3,6	4,6	5,8	7,4	9,2	11,8	15	19
	D	5÷7	7 ÷9	>9 ÷11	>11 ÷14	>14 ÷20	>20 ÷27	>27 ÷39	>39 ÷56	>56 ÷80
	V	5	6	6	8	8	10	12	14	16
	W	3,2	4	5	6,5	8	10	12,5	16	19
		CODICE CODE								
Lunghezza Length L	10	0.001461.B	0.001466.G							
	16	0.001462.C	0.001467.A	0.001473.F	0.001480.B					
	20	0.001463.D	0.001468.H	0.001474.G	0.001481.X	0.001487.W				
	25	0.001464.E	0.001469.K	0.001475.A	0.001482.Z	0.001488.E	0.001495.W			
	32	0.001465.F	0.001470.Q	0.001476.B	0.001483.S	0.001489.F	0.001496.X	0.001504.F		
	40		0.001471.D	0.001477.C	0.001484.T	0.001490.D	0.001497.Z	0.001505.G	0.001513.X	
	50		0.001472.E	0.001478.L	0.001485.R	0.001491.S	0.001498.G	0.001506.A	0.001514.Z	
	63			0.001479.M	0.001486.V	0.001492.T	0.001499.A	0.001507.B	0.001515.S	0.001523.S
	71					0.001493.R	0.001500.P	0.001508.K	0.001516.T	0.001524.T
	80					0.001494.V	0.001501.C	0.001509.L	0.001517.R	0.001525.R
	90						0.001502.D	0.001510.G	0.001518.C	0.001526.V
	100						0.001503.E	0.001511.V	0.001519.D	0.001527.W
	125							0.001512.W	0.001520.B	0.001528.E
	140								0.001521.X	0.001529.F
	160								0.001522.Z	0.001530.D
	180									0.001531.S
	200									0.001532.T

A termini di legge la **DANIELI & C. S.p.A.** considera questo documento come segreto aziendale con **divieto per chiunque** di riprodurlo e/o di renderlo comunque noto, in tutto o in parte, a terzi, ovvero a ditte concorrenti, senza specifica autorizzazione scritta della **Direzione DANIELI.**

DATA | FIRMA | DESCRIZIONE MODIFICHE | EM

According to law Danieli&C. considers this document to be a company secret and therefore prohibits any person to reproduce it or make it known in whole or in part to other parties or to competitors without specific written authorization of Danieli's Management

VITI A TESTA ESAG., PASSO GROSSO, PARZ. FILETT., CAT A e B - UNI 5737 - DIN 931 - ISO 4014
HEX HEAD BOLTS, COARSE PITCH, GRADE A and B - UNI 5737 - DIN 931 - ISO 4014

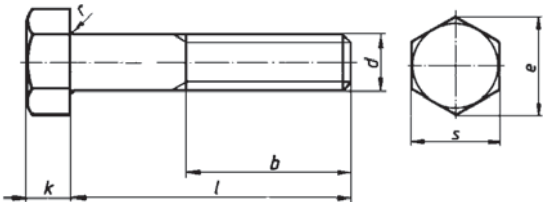

Dimensioni: UNI 5737 - DIN 931 - ISO 4014
Categoria: A e B UNI-ISO 4759/1 - DIN-ISO 4759/1
Materiale: 8.8 - UNI 3740/3 - DIN ISO 898/1
A2-70 (AISI 304) UNI 7323/8 - DIN 267/11 - ISO 3506
Tolleranza: 6g UNI 5541 - DIN 13 - ISO 965/1
Stato fornitura: classe 8.8 fosfataz. (FAR) UNI 3740/6 ISO 4042
classe 8.8 Fe/Zn5c1A ≤ M8 UNI 3740/6 ISO4042
Fe/Zn8c1A ≥ M10 UNI 3740/6 ISO4042
A2-70: grezzo

Categoria A: Filettature ≤ M24
Lungh. nom.: ≤ 10xd o 150 mm
prendendo il valore più piccolo

Categoria B: Filettature > M24
Lungh. nom.: > 10xd o 150 mm
prendendo il valore più piccolo

Gambo parzialmente filettato
Filettatura metrica ISO a passo grosso

Dimensions: UNI 5737 - DIN 931 - ISO 4014
Grade: A and B UNI-ISO 4759/1 - DIN-ISO 4759/1
Material: 8.8 - UNI 3740/3 - DIN ISO 898/1
A2-70 (AISI 304) UNI 7323/8 - DIN 267/11 - ISO 3506
Allowance: 6g UNI 5546 - DIN 13 - ISO 965/1
Manufacture: class 8.8 phosphat. (FAR) UNI 3740/6 ISO 4042
class 8.8 Fe/Zn5c1A ≤ M8 UNI 3740/6 ISO4042
Fe/Zn8c1A ≥ M10 UNI 3740/6 ISO4042
A2-70: rough

Grade A: Thread ≤ M24
Nom. length: ≤ 10xd o 150 mm
(shorter value)

Grade B: Thread > M24
Nom. length: > 10xd o 150 mm
(shorter value)

Partially threaded shank
ISO metric coarse pitch thread

Es. di design.:
0.000115.C Vite T.E. UNI 5737 - DIN 931
M8 x 40 - 8.8
Cat. A - Fosfatate nere

Ex. of design.:
0.000115.C Hex bolt UNI 5737 - DIN 931
M8 x 40 - 8.8
Cat. A - Phosphatized

Sconsigliato
Not recommended

	Ø filett. d / Dia thrd.	M 5	M 6	M 8	M 10	M 12	M 16	M 20	M 24	M 27	M 30
b	l ≤ 125	16	18	22	26	30	38	46	54	60	66
b	125<l≤200	-	-	-	32	36	44	52	60	66	72
b	l > 200	-	-	-	-	-	57	65	73	79	85
s		8	10	13	16	18	24	30	36	41	46
e		8,79	11,05	14,38	17,7	20,03	26,75	33,53	39,98	45,2	50,85
k		3,5	4	5,3	6,4	7,5	10	12,5	15	17	18,7
r		0,2	0,25	0,4	0,4	0,6	0,6	0,8	0,8	1	1
		MASS (Kg)									
LUNGHEZZA - LENGTH	30	0,005	0,009	0,017	0,028	0,039	0,086	-	-	-	-
	35	0,006	0,009	0,018	0,031	0,044	0,093	-	-	-	-
	40	0,007	0,01	0,02	0,034	0,048	0,091	-	-	-	-
	45	0,008	0,011	0,022	0,037	0,053	0,098	-	-	-	-
	50	0,009	0,013	0,024	0,04	0,057	0,106	-	-	-	-
	60	0,01	0,015	0,028	0,046	0,066	0,121	0,21	0,315	-	-
	70	0,011	0,017	0,032	0,052	0,075	0,136	0,235	0,35	-	-
	80	-	-	0,035	0,058	0,083	0,152	0,259	0,385	0,514	0,68
	90	-	-	0,039	0,064	0,092	0,167	0,283	0,42	0,558	0,72
	100	-	-	0,043	0,071	0,101	0,183	0,307	0,455	0,602	0,77
	120	-	-	0,051	0,083	0,118	0,214	0,356	0,524	0,691	0,88
	140	-	-	-	0,094	0,135	0,243	0,403	0,592	0,776	0,99
	160	-	-	-	-	0,152	0,274	0,451	0,661	0,864	1,1
	180	-	-	-	-	0,17	0,305	0,5	0,731	0,952	1,21
	200	-	-	-	-	-	-	0,548	0,8	1,04	1,32
	220	-	-	-	-	-	-	0,593	0,865	1,12	1,42
	240	-	-	-	-	-	-	0,639	0,931	1,2	1,53
	260	-	-	-	-	-	-	0,67	0,997	1,28	1,66
	280	-	-	-	-	-	-	-	1,063	1,36	1,77
	300	-	-	-	-	-	-	-	1,129	1,44	1,88

Rev.	Date	Descrizione - Description
04	01/96	Ins. viti 8.8 zincate
05	09/96	Reimpaginata

According to law Danieli&C. considers this document to be a company secret and therefore prohibits any person to reproduce it or make it known in whole or in part to other parties or to competitors without specific written authorization of Danieli's Management

Mat.: 8.8 Fosfatato - Phosphazized
Uso generale - General service

d	M 5	M 6	M 8	M 10	M 12	M 16	M 20	M 24	M 27	M 30
	UNI 5737 - DIN 931				CODICE - CODE					
LUNGHEZZA - LENGTH 30	0.000101.N	0.000106.L	0.000113.A	0.064760.S	0.065733.C	0.056675.Q	-	-	-	-
35	0.000102.P	0.000107.M	0.000114.B	0.050034.F	0.054681.C	0.055089.F	-	-	-	-
40	0.000103.Q	0.000108.V	0.000115.C	0.000124.D	0.000134.F	0.083179.B	-	-	-	-
45	0.000104.H	0.000109.W	0.000116.D	0.000125.E	0.000135.G	0.065274.P	-	-	-	-
50	0.000105.K	0.000110.K	0.000117.E	0.000126.F	0.000136.A	0.000144.Q	-	-	-	-
60	0.050025.E	0.000111.F	0.000118.N	0.000127.G	0.000137.B	0.000145.H	0.000154.K	0.107149.H	-	-
70	0.182095.K	0.000112.G	0.000119.P	0.000128.Q	0.000138.K	0.000146.K	0.000155.L	0.000164.M	-	-
80	-	-	0.000120.M	0.000129.H	0.000139.L	0.000147.L	0.000156.M	0.000165.N	0.161795.F	0.000175.Q
90	-	-	0.000121.A	0.000130.P	0.000140.Z	0.000148.R	0.000157.N	0.000166.P	0.161796.G	0.000176.H
100	-	-	0.000122.B	0.000131.C	0.000141.M	0.000149.V	0.000158.W	0.000167.Q	0.161797.A	0.000177.K
120	-	-	0.000123.C	0.000132.D	0.000142.N	0.000150.T	0.000159.X	0.000168.Z	0.161798.H	0.000178.T
140	-	-	-	0.000133.E	0.000143.P	0.000151.P	0.000160.V	0.000169.S	0.161799.K	0.000179.R
160	-	-	-	-	0.065726.D	0.000152.Q	0.000161.H	0.000170.X	0.161800.Q	0.000180.H
180	-	-	-	-	0.050048.R	0.000153.H	0.000162.K	0.000171.L	0.161801.D	0.000181.E
200	-	-	-	-	-	-	0.000163.L	0.000172.M	0.161802.E	0.000182.F
220	-	-	-	-	-	-	0.050085.B	0.000173.N	0.161803.F	0.000183.G
240	-	-	-	-	-	-	0.050087.D	0.000174.P	0.161804.G	0.000184.A
260	-	-	-	-	-	-	0.056726.C	0.306396.H	0.306408.V	0.306420.M
280	-	-	-	-	-	-	-	0.306397.K	0.306409.W	0.306421.A
300	-	-	-	-	-	-	-	0.306398.T	0.306410.K	0.306422.B

Mat.: 8.8 Zincato - Galvanized
Uso: impiantistica - Service: systems

d	M 5	M 6	M 8	M 10	M 12	M 16	M 20	M 24	M 27	M 30
	UNI 5737 - DIN 931				CODICE - CODE					
LUNGHEZZA - LENGTH 30	0.321613.F	0.321620.K	0.071246.Q	0.321637.G	0.321645.P	0.064426.X	-	-	-	-
35	0.321614.G	0.321621.F	0.321627.E	0.155005.D	0.321646.Q	0.321652.N	-	-	-	-
40	0.321615.A	0.321622.G	0.321628.N	0.168417.B	0.062973.A	0.068317.M	-	-	-	-
45	0.321616.B	0.321623.A	0.321629.P	0.321638.Q	0.155006.E	0.321653.P	-	-	-	-
50	0.321617.C	0.321624.B	0.321630.M	0.321639.H	0.064425.W	0.069585.C	-	-	-	-
60	0.321618.L	0.321625.C	0.321631.A	0.068316.L	0.068328.X	0.062216.A	0.321656.K	0.321663.H	-	-
70	0.321619.M	0.321626.D	0.321632.B	0.321640.W	0.068329.Z	0.063979.Q	0.116586.H	0.062220.H	-	-
80	-	-	0.321633.C	0.072522.X	0.321647.H	0.068671.X	0.062219.L	0.062976.D	0.321673.L	0.321683.E
90	-	-	0.321634.D	0.321641.K	0.321648.S	0.321654.Q	0.171393.E	0.321664.K	0.321674.M	0.321684.F
100	-	-	0.321635.E	0.321642.L	0.072520.A	0.071200.X	0.062218.K	0.321665.L	0.098067.D	0.321685.G
120	-	-	0.321636.F	0.321643.M	0.070857.H	0.057041.G	0.064109.H	0.321666.M	0.321675.N	0.321686.A
140	-	-	-	0.321644.N	0.321649.T	0.068670.B	0.321657.L	0.064122.W	0.169998.K	0.169992.D
160	-	-	-	-	0.321650.Z	0.063968.M	0.064117.S	0.321667.N	0.169982.B	0.321687.B
180	-	-	-	-	0.321651.M	0.321655.H	0.321658.R	0.321668.W	0.321676.P	0.321688.K
200	-	-	-	-	-	-	0.321659.V	0.067026.V	0.321677.Q	0.321689.L
220	-	-	-	-	-	-	0.321660.T	0.321669.X	0.321678.Z	0.321690.H
240	-	-	-	-	-	-	0.321661.P	0.321670.V	0.321679.S	0.321691.E
260	-	-	-	-	-	-	0.321662.Q	0.067677.N	0.321680.P	0.321692.F
280	-	-	-	-	-	-	-	0.321671.H	0.321681.C	0.321693.G
300	-	-	-	-	-	-	-	0.321672.K	0.321682.D	0.321694.A

Mat.: A2-70
Usi speciali - Special service

d	M 5	M 6	M 8	M 10	M 12	M 16	M 20	M 24	M 27	M 30
	UNI 5737 - DIN 931				CODICE - CODE					
LUNGHEZZA - LENGTH 30	0.091522.K	0.091528.Z	0.091533.N	0.091544.Z	0.091551.X	0.065730.M	-	-	-	-
35	0.091523.L	0.091529.S	0.091534.P	0.091545.S	0.091552.Z	0.091558.E	-	-	-	-
40	0.091524.M	0.082893.N	0.072363.P	0.091546.T	0.091553.S	0.091559.F	-	-	-	-
45	0.091525.N	0.091530.X	0.091535.Q	0.056970.M	0.056971.A	0.091560.D	-	-	-	-
50	0.050928.L	0.082894.P	0.091536.H	0.050929.M	0.082405.V	0.091561.S	-	-	-	-
60	0.091526.P	0.091531.L	0.091537.K	0.050930.K	0.050931.F	0.050932.G	0.091565.W	0.091573.W	-	-
70	0.091527.Q	0.091532.M	0.091538.T	0.091547.R	0.063560.Q	0.062592.R	0.091566.X	0.072874.G	-	-
80	-	-	0.091539.R	0.078159.Z	0.091554.T	0.056074.A	0.091567.Z	0.091574.X	0.161815.T	0.091582.P
90	-	-	0.091540.G	0.091548.C	0.091555.R	0.091562.T	0.091568.G	0.091575.Z	0.161816.R	0.091583.Q
100	-	-	0.091541.V	0.091549.D	0.091556.V	0.056072.F	0.091569.A	0.063339.N	0.161817.V	0.091584.H
120	-	-	0.091542.W	0.068679.F	0.063563.F	0.063338.M	0.056182.T	0.091576.S	0.161818.D	0.091585.K
140	-	-	-	0.091550.B	0.063562.E	0.063976.E	0.058318.T	0.063695.C	0.161819.E	0.091586.L
160	-	-	-	-	0.070738.S	0.091563.R	0.054729.L	0.091577.T	0.161820.C	0.091587.M
180	-	-	-	-	0.091557.W	0.091564.V	0.091570.F	0.091578.B	0.161821.Z	0.091588.V
200	-	-	-	-	-	-	0.091571.R	0.091579.C	0.161822.S	0.091589.W
220	-	-	-	-	-	-	0.091572.V	0.091580.S	0.161823.T	0.091590.R
240	-	-	-	-	-	-	0.050933.A	0.091581.N	0.161824.R	0.091591.Q
260	-	-	-	-	-	-	0.182096.L	0.306405.K	0.306417.E	0.306429.H
280	-	-	-	-	-	-	-	0.306406.L	0.306418.N	0.306430.P
300	-	-	-	-	-	-	-	0.306407.M	0.306419.P	0.306431.C

Rev.	Date	Descrizione - Description
05	09/96	Reimpaginata

Fig. A01.1/3

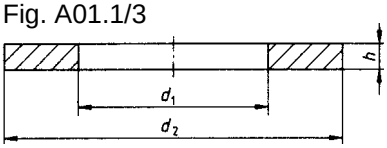

Tab. A01.1/1

Sconsigliato / *Not recommended*

Nom d_1	Filett. *Thread*	d_1 Nom min	d_1 Nom max	d_2 Nom max	d_2 Nom min	h Nom	h max	h min	d_a max	d_a min	r	Massa *Mass* kg (7)	CODICE *ICODE* DIN 125-1 Fosfatate nere *Black phosphatized* ISO 9717 UNI 3740-6 **Cl. 140HV** Acc.Carbonio *Carbon Steel* (1)	DIN 125-1 Zincate *Zinc coated* Fe/Zn 8 ISO 4042 **Cl. 140HV** Acc.Carbonio *Carbon Steel* (1)	DIN 125-1 Naturali *Plain* **Cl. 140HV** Acc. Inox *Stainless Steel* (2)	DIN 125-2 Fosfatate nere *Black phosphatized* ISO 9717 UNI 3740-6 **Cl. 300HV** Acc.Carbonio *Carbon Steel* (3)
4,3	M4	4,3	4,48	9	8,64	0,8	0,9	0,7	4,7	4,5	0,2	0,001	0.001241.M	0.314052.A	0.088656.M	-
5,3	M5	5,3	5,48	10	9,64	1	1,1	0,9	5,7	5,5	0,2	0,001	0.001242.N	0.314053.B	0.088657.N	-
6,4	M6	6,4	6,62	12	11,57	1,6	1,8	1,4	6,8	6,6	0,2	0,001	0.001243.P	0.314054.C	0.050582.A	0.351780.S
8,4	M8	8,4	8,62	16	15,57	1,6	1,8	1,4	9,2	9	0,4	0,001	0.001244.Q	0.314055.D	0.050583.B	0.351781.N
10,5	M10	10,5	10,77	20	19,48	2	2,2	1,8	11,2	11	0,4	0,003	0.001245.H	0.314056.E	0.050584.C	0.351782.P
13	M12	13	13,27	24	23,48	2,5	2,7	2,3	13,7	13,5	0,4	0,006	0.001246.K	0.314057.F	0.056071.E	0.351783.Q
15	M14	15	15,27	28	27,48	2,5	2,7	2,3	15,7	15,5	0,4	0,008	0.050571.N	0.314058.P	0.083366.E	0.351784.H
17	M16	17	17,27	30	29,48	3	3,3	2,7	17,7	17,5	0,4	0,011	0.001247.L	0.314059.Q	0.056073.G	0.351785.K
19	M18	19	19,33	34	33,38	3	3,3	2,7	20,2	20	0,6	0,015	0.050572.P	0.314060.N	0.083365.D	0.351786.L
21	M20	21	21,33	37	36,38	3	3,3	2,7	22,4	22	0,7	0,017	0.001248.R	0.314061.B	0.068277.V	0.351787.M
23	M22	23	23,33	39	38,38	3	3,3	2,7	24,4	24	0,7	0,018	0.050573.Q	0.314062.C	0.088658.W	0.351788.V
25	M24	25	25,33	44	43,38	4	4,3	3,7	26,4	26	0,7	0,032	0.001249.V	0.314063.D	0.068976.K	0.351789.W
28	M27	28	28,33	50	49,38	4	4,3	3,7	30,4	30	1,2	0,042	0.050574.H	0.314064.E	0.088659.X	0.351790.R
31	M30	31	31,39	56	55,26	4	4,3	3,7	33,4	33	1,2	0,054	0.001250.T	0.314065.F	0.088660.V	0.351791.Q
34	M33	34	34,62	60	58,8	5	5,6	4,4	36,4	36	1,2	0,075	0.050576.L	0.314066.G	0.088661.H	0.351792.H
37	M36	37	37,62	66	64,8	5	5,6	4,4	39,4	39	1,2	0,092	0.001251.P	0.314067.A	0.088662.K	0.351793.K
40	M39	40	40,62	72	70,8	6	6,6	5,4	42,4	42	1,2	0,133	0.314078.L	0.314068.H	0.314083.S	0.351794.L
43	M42	43	43,62	78	76,8	7	8	6	45,6	45	1,3	0,183	0.001252.Q	0.314069.K	0.088663.L	0.351795.M
50	M48	50	50,62	92	90,6	8	9	7	52,6	52	1,3	0,294	0.001253.H	0.314070.Q	0.088664.M	0.351796.N
54	M52	54	54,74	98	96,6	8	9	7	56,6	56	1,3	0,330	0.001254.K	0.314071.D	0.088665.N	0.351797.P
58	M56	58	58,74	105	103,6	9	10	8	63	62	2,5	0,425	0.314079.M	0.314072.E	0.314084.T	0.351798.X
66	M64	66	66,74	115	113,6	9	10	8	71	70	2,5	0,492	0.001255.L	0.314073.F	0.088666.P	0.351799.Z
74	M72	74	74,74	125	123,4	10	11	9	79	78	2,5	0,626	0.001256.M	0.314074.G	0.088667.Q	0.351800.W
82	M80	82	82,87	140	138,4	12	13,2	10,8	87	86	2,5	0,953	0.314080.B	0.314075.A	0.314085.R	0.351801.K
93	M90	93	93,87	160	158,4	12	13,2	10,8	97	96	2	1,250	0.314081.X	0.314076.B	0.314086.V	0.351802.L
104	M100	104	104,9	175	173,4	14	15,2	12,8	108	107	2	1,710	0.314082.Z	0.314077.C	0.314087.W	0.351803.M

According to law Danieli&C. considers this document to be a company secret and therefore prohibits any person to reproduce it or make it known in whole or in part to other parties or to competitors without specific written authorization of Danieli's Management

VITI A TESTA CILINDRICA CON ESAGONO INCASSATO - CATEG. A - UNI 5931 - DIN 912 - ISO 4762 FILETTATURA METRICA ISO PASSO GROSSO

HEXAGON SOCKET HEAD CAP SCREW - GRADE A - UNI 5931 - DIN 912 - ISO 4762 ISO METRIC COARSE THREAD

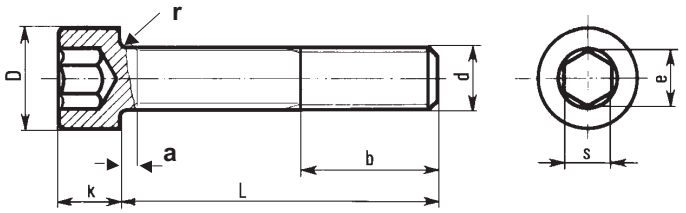

Dimensioni: UNI 5931 - DIN 912 - ISO 4762
Categortia: A UNI-ISO 4759/1 - DIN-ISO 4759/1
Materiale: 8.8 - 12.9 UNI 3740/3 - DIN-ISO 898/1
Tolleranza: 6g UNI 5541 - DIN 13 - ISO 965/1
Stato fornitura: fosfatate nere UNI 3740/6 - ISO 4042

Gambo parzialmente filettato
Filettatura metrica ISO a passo grosso

Dimensions: UNI 5931 - DIN 912 - ISO 4762
Grade: A UNI-ISO 4759/1 - DIN-ISO 4759/1
Material: 8.8 - 12.9 UNI 3740/3 - DIN-ISO 898/1
Allowance: 6g UNI 5541 - DIN 13 - ISO 965/1
Manufacture: phosphatized UNI 3740/6 - ISO 4042

Parly threaded shank
ISO metric coarse pitch thread

Es. di design.:
0.000412.D Vite TCEI UNI 5931 - DIN 912
M 8 x 50 - 8.8
Cat. A - Fosfatate nere

Ex. of design.:
0.000412.D Hex socket head cap screw UNI 5931 - DIN 912
M 8 x 50 - 8.8
Gr. A - Phosphatized

Ø filettat. d Dia screw	M 5	M 6	M 8	M 10	M 12	M 16	M 20	M 24	M 30
b	22	24	28	32	36	44	52	60	72
a max	2,4	3	3,7	4,5	5,3	6	7,5	9	10,5
s	4	5	6	8	10	14	17	19	22
e	4,59	5,73	6,87	9,17	11,45	16,02	19,44	21,73	25,15
k	5	6	8	10	12	16	20	24	30
D	8,5	10	13	16	18	24	30	36	45
r	0,2	0,25	0,4	0,4	0,6	0,6	0,8	0,8	1

L	CODICE CODE								
	Massa	M 5		Massa	M 6		Massa	M 8	
	Kg	8.8	12.9	Kg	8.8	12.9	Kg	8.8	12.9
10	0,003	0.000380.S	0.075696.A	0,005	0.000390.R	0.096685.R	0,01	0.000404.N	0.096943.W
16	0,003	0.000381.N	0.096683.S	0,006	0.000391.Q	0.075558.N	0,012	0.000405.P	0.056955.A
20	0,004	0.000382.P	0.075304.Q	0,007	0.000392.H	0.070621.L	0,013	0.000406.Q	0.057786.A
25	0,005	0.000383.Q	0.096684.T	0,008	0.000393.K	0.084093.H	0,015	0.000407.H	0.056956.B
30	0,006	0.000384.H	0.061798.Q	0,008	0.000394.L	0.054635.E	0,017	0.000408.S	0.075695.G
35	0,006	0.000385.K	0.077581.Z	0,01	0.000395.M	0.084323.R	0,019	0.000409.T	0.073028.C
40	0,007	0.000386.L	0.075683.C	0,011	0.000396.N	0.074437.V	0,021	0.000410.P	0.075559.P
45	0,008	0.000387.M	0.079999.M	0,012	0.000397.P	0.074451.A	0,023	0.000411.C	0.073027.R
50	0,009	0.000388.V	0.075687.G	0,013	0.000398.X	0.065343.L	0,025	0.000412.D	0.057787.B
60	0,011	0.000389.W	0.083160.C	0,015	0.000399.Z	0.075277.M	0,029	0.000413.E	0.066727.F
70	0,013	0.054078.K	0.075213.C	0,017	0.000400.W	0.096170.C	0,033	0.000414.F	0.075690.P
80	0,015	0.050310.R	0.075684.D	0,019	0.000401.K	0.075342.M	0,037	0.000415.G	0.080052.F
90	-	-	-	0,021	0.000402.L	0.077466.D	0,041	0.000416.A	0.079327.K
100	-	-	-	0,023	0.000403.M	0.079143.H	0,045	0.000417.B	0.075933.X
120	-	-	-		-	-	0,049	0.000418.K	0.096944.X

A termini di legge la **DANIELI & C. S.p.A.** considera questo documento come segreto aziendale con **divieto per chiunque** di riprodurlo e/o di renderlo comunque noto, in tutto o in parte, a terzi, ovvero a ditte concorrenti, senza specifica autorizzazione scritta della **Direzione DANIELI.**

According to law Danieli&C. considers this document to be a company secret and therefore prohibits any person to reproduce it or make it known in whole or in part to other parties or to competitors without specific written authorization of Danieli's Management

VITI A TESTA CILINDRICA CON ESAGONO INCASSATO - CATEG. A - UNI 5931 - DIN 912 - ISO 4762
FILETTATURA METRICA ISO PASSO GROSSO

HEXAGON SOCKET HEAD CAP SCREW - GRADE A - UNI 5931 - DIN 912 - ISO 4762
ISO METRIC COARSE THREAD

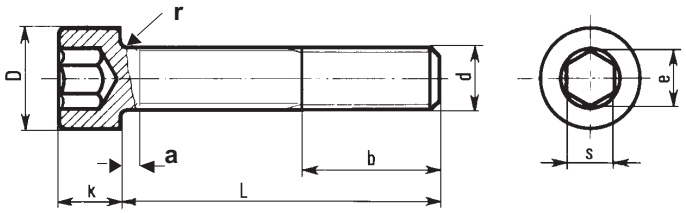

L	CODICE CODE								
	Massa	M 10		Massa	M 12		Massa	M 16	
	Kg	8.8	12.9	Kg	8.8	12.9	Kg	8.8	12.9
16	0,021	0.000419.L	0.096946.S	-	-	-	-	-	-
20	0,023	0.000420.H	0.054785.D	0,032	0.000433.B	0.056960.K	-	-	-
25	0,025	0.000421.E	0.059756.R	0,036	0.000434.C	0.063642.M	-	-	-
30	0,028	0.000422.F	0.054784.C	0,039	0.000435.D	0.054826.W	0,078	0.000446.P	0.080056.C
35	0,03	0.000423.G	0.063673.M	0,043	0.000436.E	0.056959.M	0,084	0.000447.Q	0.057653.K
40	0,033	0.000424.A	0.056417.W	0,046	0.000437.F	0.061579.M	0,091	0.000448.Z	0.054726.A
45	0,036	0.000425.B	0.075215.E	0,05	0.000438.P	0.070818.H	0,097	0.000449.S	0.055576.D
50	0,039	0.000426.C	0.080880.F	0,054	0.000439.Q	0.056957.C	0,106	0.000450.X	0.055381.G
60	0,063	0.000427.D	0.075279.W	0,063	0.000440.V	0.054950.N	0,122	0.000451.L	0.055575.C
70	0,052	0.000428.M	0.077467.E	0,071	0.000441.H	0.068378.A	0,138	0.000452.M	0.054184.T
80	0,058	0.000429.N	0.075299.K	0,08	0.000442.K	0.077932.Z	0,154	0.000453.N	0.075448.P
90	0,065	0.000430.L	0.072312.C	0,089	0.000443.L	0.074450.M	0,17	0.000454.P	0.056958.L
100	0,071	0.000431.G	0.015090.V	0,098	0.000444.M	0.080097.W	0,186	0.000455.Q	0.055467.F
120	0,078	0.000432.A	0.097716.R	0,116	0.000445.N	0.074452.B	0,218	0.000456.H	0.055573.A
140	-	-	-		-	-	0,25	0.000457.K	0.063038.C

L	CODICE CODE								
	Massa	M 20		Massa	M 24		Massa	M 30	
	Kg	8.8	12.9	Kg	8.8	12.9	Kg	8.8	12.9
40	0,15	0.000458.T	0.096954.S	0,27	0.000469.W	0.058940.X	-	-	-
45	0,161	0.000459.R	0.054979.P	0,285	0.000470.R	0.096948.B	-	-	-
50	0,172	0.000460.S	0.054725.G	0,3	0.000471.Q	0.060190.P	-	-	-
60	0,194	0.000461.N	0.058753.X	0,33	0.000472.H	0.060189.H	0,581	0.055988.A	0.096950.A
70	0,216	0.000462.P	0.056091.T	0,363	0.000473.K	0.055254.Q	0,635	0.050366.Z	0.072862.C
80	0,241	0.000463.Q	0.064074.A	0,399	0.000474.L	0.069480.N	0,69	0.000482.C	0.054951.B
90	0,266	0.000464.H	0.063136.R	0,435	0.000475.M	0.056090.E	0,745	0.000483.D	0.096951.W
100	0,291	0.000465.K	0.063620.L	0,471	0.000476.N	0.058601.X	0,8	0.000484.E	0.057882.S
120	0,341	0.000466.L	0.064183.R	0,543	0.000477.P	0.058600.B	0,91	0.000485.F	0.065895.X
140	0,391	0.000467.M	0.055527.R	0,615	0.000478.X	0.064351.K	1,02	0.000486.G	0.063133.Z
160	0,441	0.000468.V	0.053090.B	0,687	0.000479.Z	0.065562.G	1,13	0.000487.A	0.061912.T
180	-	-	-	0,759	0.000480.N	0.092790.D	1,24	0.000488.H	0.096952.X
200	-	-	-	0,831	0.000481.B	0.053080.G	1,35	0.000489.K	0.096953.Z
220	-	-	-	0,903	0.069222.N	0.072799.M	1,46	0.000490.Q	0.075011.V

A termini di legge la **DANIELI & C. S.p.A.** considera questo documento come segreto aziendale con **divieto per chiunque** di riprodurlo e/o di renderlo comunque noto, in tutto o in parte, a terzi, ovvero a ditte concorrenti, senza specifica autorizzazione scritta della **Direzione DANIELI.**

According to law Danieli&C. considers this document to be a company secret and therefore prohibits any person to reproduce it or make it known in whole or in part to other parties or to competitors without specific written authorization of Danieli's Management

VITI A TESTA ESAG., PASSO GROSSO, INTERAM. FILETT., CAT A e B- UNI 5739 - DIN 933 - ISO 4017
HEX HEAD SCREW, COARSE PITCH, GRADE A and B - UNI 5739 - DIN 933 - ISO 4017

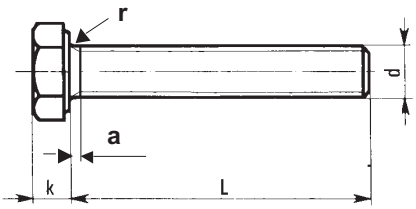

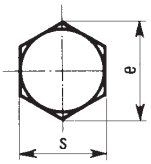

Dimensioni: UNI 5739 - DIN 933 - ISO 4017
Categoria: A e B UNI-ISO 4759/1 - DIN-ISO 4759/1
Mat.: 8.8 - UNI 3740/3 - DIN ISO 898
A2-70 (AISI 304) UNI 7323/8 - DIN 267/11 - ISO 3506
Tolleranza: 6g UNI 5541 - DIN 13 - ISO 965/1
Stato fornit.: cl. 8.8 fosfataz. (FAR) UNI 3740/6 - ISO 4042
cl. 8.8 Fe/Zn5c1A ≤ M8 UNI 3740/6 ISO4042
Fe/Zn8c1A ≥ M10 UNI 3740/6 ISO4042
A2-70: grezzo

Gambo interamente filettato
Filettatura metrica ISO a passo grosso

Categoria A: Filettature ≤ M24
Lungh. nom.: ≤ 10xd o 150 mm
prendendo il valore più piccolo

Categoria B: Filettature > M24
Lungh. nom.: > 10xd o 150 mm
prendendo il valore più piccolo

Grade A: Thread ≤ M24
Nom. length: ≤ 10xd o 150 mm
(shorter value)

Grade B: Thread > M24
Nom. length: > 10xd o 150 mm
(shorter value)

Dimensions: UNI 5739 - DIN 933 - ISO 4017
Grade: A and B UNI-ISO 4759/1 - DIN-ISO 4759/1
Mat.: 8.8 - UNI 3740/3 - DIN ISO 898
A2-70 (AISI 304) UNI 7323/8 - DIN 267/11 - ISO 3506
Allowance: 6g UNI 5541 - DIN 13 - ISO 965/1
Manufact.: cl. 8.8 phosphat. (FAR) UNI 3740/6 - ISO 4042
cl. 8.8 Fe/Zn5c1A ≤ M8 UNI 3740/6 ISO4042
Fe/Zn8c1A ≥ M10 UNI 3740/6 ISO4042
A2-70: rough

Fully threaded shank
ISO metric coarse pitch thread

Es. di design.:
0.000268.C Vite T.E. UNI 5739 - DIN 933
M8 x 40 - 8.8
Cat. A - Fosfatate nere

Ex. of design.:
0.000268.C Hex screw UNI 5739 - DIN 933
M8 x 40 - 8.8
Cat. A - Phosphatized

Ø filett. d Thrd. dia		M 4	M 5	M 6	M 8	M 10	M 12	M 16	M 20	M 24	M 30
a max		2,1	2,4	3	3,75	4,5	5,25	6	7,5	9	10,5
s		7	8	10	13	16	18	24	30	36	46
e		7,74	8,87	11,05	14,38	18,9	21,1	26,75	33,53	39,98	51,28
k		2,8	3,5	4	5,3	6,4	7,5	10	12,5	15	18,7
r		0,2	0,2	0,25	0,4	0,4	0,6	0,6	0,8	0,8	1
					MASS	(Kg)					
LUNGHEZZA - LENGTH	8	0,001	0,002	-	-	-	-	-	-	-	-
	10	0,001	0,002	0,004	0,008	-	-	-	-	-	-
	12	0,002	0,003	0,004	0,009	-	-	-	-	-	-
	16	0,002	0,003	0,005	0,011	0,020	-	-	-	-	-
	20	0,002	0,004	0,006	0,012	0,021	-	-	-	-	-
	25	0,003	0,004	0,006	0,014	0,024	0,034	0,006	-	-	-
	30	0,003	0,005	0,007	0,015	0,026	0,038	0,077	-	-	-
	35	0,003	0,006	0,008	0,017	0,029	0,041	0,083	-	-	-
	40	-	0,006	0,009	0,019	0,031	0,045	0,09	0,155	0,244	-
	45	-	0,007	0,01	0,02	0,034	0,048	0,097	0,165	0,259	-
	50	-	-	0,011	0,022	0,036	0,052	0,103	0,176	0,274	0,496
	60	-	-	0,013	0,025	0,041	0,058	0,117	0,196	0,304	0,543
	70	-	-	0,014	-	0,046	0,066	0,13	0,217	0,334	0,59
	80	-	-	-	-	-	-	0,144	0,238	0,363	0,637
	90	-	-	-	-	-	-	0,157	0,258	0,393	0,685
	100	-	-	-	-	-	-	0,17	0,279	0,423	0,732
	120	-	-	-	-	-	-	-	0,32	0,483	0,827
	140	-	-	-	-	-	-	-	-	0,543	0,921
	160	-	-	-	-	-	-	-	-	-	1,01

Rev.	Date	Descrizione - Description
04	01/96	Ins. viti 8.8 zincate
05	09/96	Reimpaginata

According to law Danieli&C. considers this document to be a company secret and therefore prohibits any person to reproduce it or make it known in whole or in part to other parties or to competitors without specific written authorization of Danieli's Management

Mat.: 8.8 Fosfatato - Phosphazized
Uso generale - General service

d	M 4	M 5	M6	M8	M 10	M 12	M 16	M 20	M 24	M 30
	UNI 5739 - DIN 933				CODICE - CODE					
LUNGHEZZA - LENGTH										
8	0.314212.E	0.068729.S	-	-	-	-	-	-	-	-
10	0.000241.Z	0.000247.X	0.050123.D	0.050126.G	-	-	-	-	-	-
12	0.070903.Q	0.061872.B	0.050124.E	0.064493.T	-	-	-	-	-	-
16	0.000242.S	0.000248.F	0.000255.X	0.000263.X	0.050132.E	-	-	-	-	-
20	0.000243.T	0.000249.G	0.000256.Z	0.000264.Z	0.000272.Z	-	-	-	-	-
25	0.000244.R	0.000250.E	0.000257.S	0.000265.S	0.000273.S	0.000281.H	0.050157.P	-	-	-
30	0.000245.V	0.000251.T	0.000258.A	0.000266.T	0.000274.T	0.000282.K	0.000289.S	-	-	-
35	0.000246.W	0.000252.R	0.000259.B	0.000267.R	0.000275.R	0.000283.L	0.000290.X	-	-	-
40	-	0.000253.V	0.000260.G	0.000268.C	0.000276.V	0.000284.M	0.000291.L	0.000299.R	0.000308.D	-
45	-	0.000254.W	0.000261.V	0.000269.D	0.000277.W	0.000285.N	0.000292.M	0.000300.A	0.000309.E	-
50	-	-	0.000262.W	0.000270.B	0.000278.E	0.000286.P	0.000293.N	0.000301.W	0.000310.T	0.000318.W
60	-	-	-	0.000271.X	0.000279.F	0.000287.Q	0.000294.P	0.000302.X	0.000311.P	0.000319.X
70	-	-	-	-	0.000280.V	0.000288.Z	0.000295.Q	0.000303.Z	0.000312.Q	0.000320.V
80	-	-	-	-	-	-	0.000296.H	0.000304.S	0.000313.H	0.000321.H
90	-	-	-	-	-	-	0.000297.K	0.000305.T	0.000314.K	0.000322.K
100	-	-	-	-	-	-	0.000298.T	0.000306.R	0.000315.L	0.000323.L
120	-	-	-	-	-	-	-	0.000307.V	0.000316.M	0.000324.M
140	-	-	-	-	-	-	-	-	0.000317.N	0.000325.N
160	-	-	-	-	-	-	-	-	-	0.000326.P

Mat.: 8.8 Zincato - Galvanized
Uso: impiantistica - Service: systems

d	M 4	M 5	M6	M8	M 10	M 12	M 16	M 20	M 24	M 30
	UNI 5739 - DIN 933				CODICE - CODE					
LUNGHEZZA - LENGTH										
8	0.321742.Q	0.321749.X	-	-	-	-	-	-	-	-
10	0.321743.H	0.321750.V	0.321754.M	0.321758.Z	-	-	-	-	-	-
12	0.321744.K	0.321751.H	0.169424.B	0.321759.S	-	-	-	-	-	-
16	0.057625.F	0.078735.K	0.321755.N	0.062465.C	0.070654.V	-	-	-	-	-
20	0.321745.L	0.057098.B	0.057100.N	0.057101.B	0.057103.D	-	-	-	-	-
25	0.321746.M	0.063881.W	0.066301.L	0.057037.W	0.057788.K	0.057858.Q	0.065355.Q	-	-	-
30	0.321747.N	0.057626.G	0.057627.A	0.057630.Q	0.057631.D	0.193913.N	0.055511.T	-	-	-
35	0.321748.W	0.321752.K	0.321756.P	0.196475.T	0.171016.X	0.057633.F	0.070859.T	-	-	-
40	-	0.057099.C	0.057036.V	0.057444.A	0.057632.E	0.057108.H	0.057039.F	0.065352.M	0.066443.A	-
45	-	0.321753.L	0.321757.Q	0.321760.X	0.321762.M	0.321763.N	0.072346.N	0.321765.Q	0.321771.N	-
50	-	-	0.057628.H	0.057102.C	0.057104.E	0.057107.A	0.057639.M	0.321766.H	0.321772.P	0.321775.K
60	-	-	-	0.321761.L	0.065356.H	0.065185.X	0.057110.F	0.321767.K	0.067671.P	0.321776.L
70	-	-	-	-	0.057105.F	0.057634.G	0.062751.H	0.321768.T	0.169981.A	0.321777.M
80	-	-	-	-	-	-	0.057640.S	0.321769.R	0.321773.Q	0.321778.V
90	-	-	-	-	-	-	0.171392.D	0.169425.C	0.321774.H	0.321779.W
100	-	-	-	-	-	-	0.321764.P	0.321770.S	0.068118.M	0.321780.L
120	-	-	-	-	-	-	-	0.068318.V	0.081318.B	0.321781.G
140	-	-	-	-	-	-	-	-	0.068330.W	0.321782.A
160	-	-	-	-	-	-	-	-	-	0.321783.B

Mat.: A2-70
Usi speciali - Special service

d	M 4	M 5	M6	M8	M 10	M 12	M 16	M 20	M 24	M 30
	UNI 5739 - DIN 933				CODICE - CODE					
LUNGHEZZA - LENGTH										
8	0.113274.C	0.113276.E	-	-	-	-	-	-	-	-
10	0.091719.F	0.091725.W	0.091733.W	0.113279.Q	-	-	-	-	-	-
12	0.113275.D	0.113277.F	0.113278.P	0.113280.E	-	-	-	-	-	-
16	0.091720.D	0.091726.X	0.091734.X	0.091744.G	0.113281.T	-	-	-	-	-
20	0.091721.S	0.091727.Z	0.091735.Z	0.091745.A	0.091828.V	-	-	-	-	-
25	0.091722.T	0.091728.G	0.091736.S	0.091746.B	0.091829.W	0.091837.P	0.113288.A	-	-	-
30	0.091723.R	0.091729.A	0.091737.T	0.091747.C	0.091830.R	0.091838.X	0.091808.A	-	-	-
35	0.091724.V	0.091730.F	0.091738.B	0.091748.L	0.091831.Q	0.091839.Z	0.091809.B	-	-	-
40	-	0.091731.R	0.091739.C	0.091749.M	0.091832.H	0.091840.D	0.091810.X	0.091845.W	0.091818.T	-
45	-	0.091732.V	0.091740.Q	0.091750.K	0.091833.K	0.091841.S	0.091811.L	0.091846.X	0.091819.R	-
50	-	-	0.091741.D	0.091751.F	0.091834.L	0.091842.T	0.091812.M	0.091847.Z	0.091820.S	0.091854.X
60	-	-	0.091742.E	0.091752.G	0.091835.M	0.091843.R	0.091813.N	0.091848.G	0.091821.N	0.091855.Z
70	-	-	0.091743.F	-	0.091836.N	0.091844.V	0.091814.P	0.091849.A	0.091822.P	0.091856.S
80	-	-	-	-	-	-	0.091815.Q	0.091850.F	0.091823.Q	0.091857.T
90	-	-	-	-	-	-	0.091816.H	0.091851.R	0.091824.H	0.091858.B
100	-	-	-	-	-	-	0.091817.K	0.091852.V	0.091825.K	0.091859.C
120	-	-	-	-	-	-	-	0.091853.W	0.091826.L	0.091860.A
140	-	-	-	-	-	-	-	-	0.091827.M	0.091861.W
160	-	-	-	-	-	-	-	-	-	0.091862.X

According to law Danieli&C. considers this document to be a company secret and therefore prohibits any person to reproduce it or make it known in whole or in part to other parties or to competitors without specific written authorization of Danieli's Management

ROSETTE ELASTICHE SPACCATE DIN 127 - UNI 1751 - Forma B
SPRING LOCK WASHERS DIN 127 - UNI 1751 - Form B

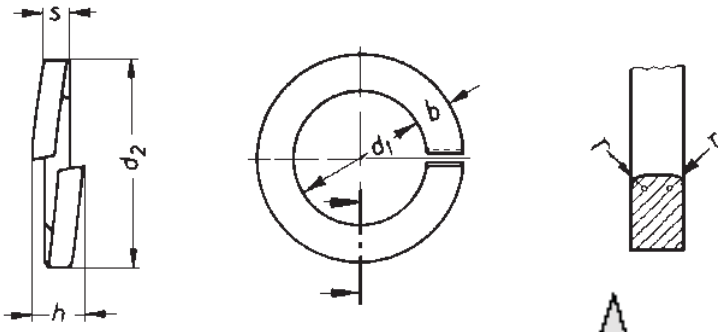

Materiale: Acciaio per molle HRC 44-49
Acc. inoss. A2-70
Estremità diritte forma B
Stato fornit.: fosfatate (FAR)
zincate Fe/Zn8c1A DIN 267/9
A2-70 grezze
Impiego: bulloneria cl. di resist. ≤ 5.8

Material: Spring steel HRC 44-49
Stainless steel A2-70
Square ends form B
Supply: phosphatized (FAR)
zinc coated Fe/Zn8c1A DIN 267/9
A2-70 rough
Fittings strength cl. ≤ 5.8

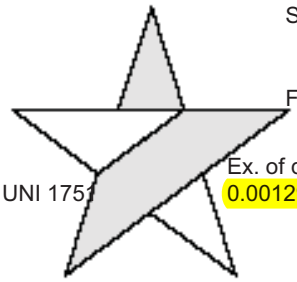

Es. di design.:
0.001298.P Rosetta el. spacc. DIN 127 UNI 1751
B 20 Acc. per molle
Fosfatata nera

Ex. of design.:
0.001298.P Spring washer DIN 127 UNI 1751
B 20 Spring steel
Phosphatized

Sconsigliato
Not recommended

d nom filett. thrd.	d_1 min	d_2 max	s	h min	Mass Kg	CODICE - CODE Viti Destre Right screws Acc. fosfatato C steel phosp.	Viti Sinistre Left screws Acc. fosfatato C steel phosp.	Viti Destre Right screws Acc. zincato C steel galv.	Viti Destre Right screws A2 - 70
4	4,1	7,6	0,9	1,8	0,001	0.001291.G	0.088714.F	0.113031.L	0.113289.B
5	5,1	9,2	1,2	2,4	0,001	0.001292.A	0.088715.G	0.113032.M	0.113290.G
6	6,1	11,8	1,6	3,2	0,001	0.001293.B	0.088716.A	0.113033.N	0.113291.V
8	8,2	14,8	2	4	0,001	0.001294.C	0.088718.K	0.113034.P	0.113292.W
10	10,2	18,1	2,2	4,4	0,002	0.001295.D	0.088719.L	0.113035.Q	0.113293.X
12	12,2	21,1	2,5	5	0,004	0.001296.E	0.088720.H	0.113036.H	0.113294.Z
14	14,2	24,1	3	6	0,006	0.050639.S	0.088721.E	0.113037.K	0.113295.S
16	16,2	27,4	3,5	7	0,009	0.001297.F	0.088722.F	0.113038.T	0.113296.T
18	18,2	29,4	3,5	7	0,01	0.088700.W	0.088723.G	0.157459.H	0.083364.C
20	20,2	33,6	4	8	0,015	0.001298.P	0.088724.A	0.165554.A	0.152053.G
22	22,5	35,9	4	8	0,016	0.088701.K	0.088725.B	0.314484.Z	0.314485.S
24	24,5	40	5	10	0,026	0.001299.Q	0.088726.C	0.165553.G	0.063557.A
27	27,5	43	5	10	0,029	0.088702.L	0.088727.D	-	-
30	30,5	48,2	6	12	0,044	0.001300.W	0.088728.M	-	-
33	33,5	55,2	6	12	0,063	0.088703.M	0.088729.N	-	-
36	36,5	58,2	6	12	0,067	0.001301.K	0.088730.L	-	-
39	39,5	61,2	6	12	0,072	0.088704.N	0.088731.G	-	-
42	42,5	68,2	7	14	0,111	0.001302.L	0.088732.A	-	-
48	49	75	7	14	0,123	0.001303.M	0.088734.C	-	-
52	53	83	8	16	0,182	0.001304.N	0.088735.D	-	-
56	57	87	8	16	0,193	0.088706.Q	0.088736.E	-	-
60	61	91	8	16	0,203	0.088707.H	0.088737.F	-	-
64	65	95	8	16	0,218	0.088708.S	0.088738.P	-	-
68	69	99	8	16	0,228	0.088709.T	0.088739.Q	-	-
72	73	103	8	16	0,24	0.088710.P	0.088740.V	-	-
80	81	111	8	16	0,262	0.088711.C	0.088741.H	-	-
90	91	121	8	16	0,29	0.088712.D	0.088742.K	-	-
100	101	131	8	16	0,318	0.088713.E	0.088743.L	-	-

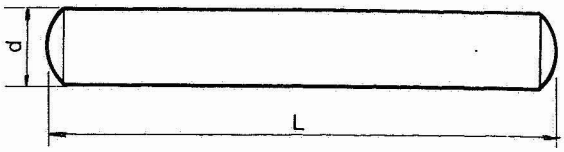

Dowel pin, ground

Tolerance ISA m6*

Steel, cold drawn

DIN 7
ISO 2338

Designation:
dowel pin, ground, ∅ 4 mm and 20 mm total length L, tolerance m6 = DIN 7 m6 × 20.

d	2	2,5	3	4	5	6	8	10	12	14	16	20
L mm	Weights in kg per 1000 pieces											
6	0,155	0,243	0,355	0,64	1,02	1,53						
8	0,203	0,320	0,466	0,84	1,33	1,97	3,58					
10	0,253	0,397	0,577	1,04	1,64	2,41	4,37	7,01	10,2			
12	0,302	0,474	0,688	1,23	1,95	2,85	5,16	8,24	12,0			
14	0,351	0,550	0,799	1,44	2,26	3,29	5,95	9,47	13,8	19,0		
16	0,401	0,627	0,910	1,63	2,57	3,73	6,74	10,7	15,6	21,4	28,3	
18	0,451	0,705	1,02	1,83	2,88	4,17	7,53	11,9	17,4	23,8	31,5	
20	0,500	0,782	1,13	2,03	3,19	4,61	8,31	13,2	19,2	26,2	34,7	56,4
24		0,937	1,35	2,43	3,80	5,50	9,89	15,6	22,8	31,0	41,1	66,2
28			1,57	2,82	4,42	6,40	11,5	18,0	26,4	35,8	47,5	76,0
32			1,79	3,21	5,03	7,30	13,0	20,6	30,0	40,6	53,9	85,8
36				3,60	5,65	8,19	14,6	23,1	33,6	45,4	60,3	95,6
40				4,00	6,27	9,08	16,2	25,5	37,2	50,2	66,6	105
45					7,03	10,2	18,1	28,6	41,7	56,2	74,5	118
50					7,80	11,3	20,1	31,7	46,2	62,3	82,5	130
55						12,4	22,1	34,8	50,7	68,3	90,4	142
60						13,5	24,0	37,9	55,2	74,4	98,4	155
70							28	44,1	64,1	86,5	114	179
80							32	50,3	73,0	98,6	130	204
90								56,5	82,1	111	146	228
100								62,7	91,0	123	161	253
120									109	147	192	302
140										171	224	351
160										195	256	400
Packaging	200	100				50		25				

* Values of tolerance m6: see page 358.

Execution:
tolerance m6 - outside surface = R_z 4
both ends = R_z 63
and DIN 267/1